Pedestrian gate

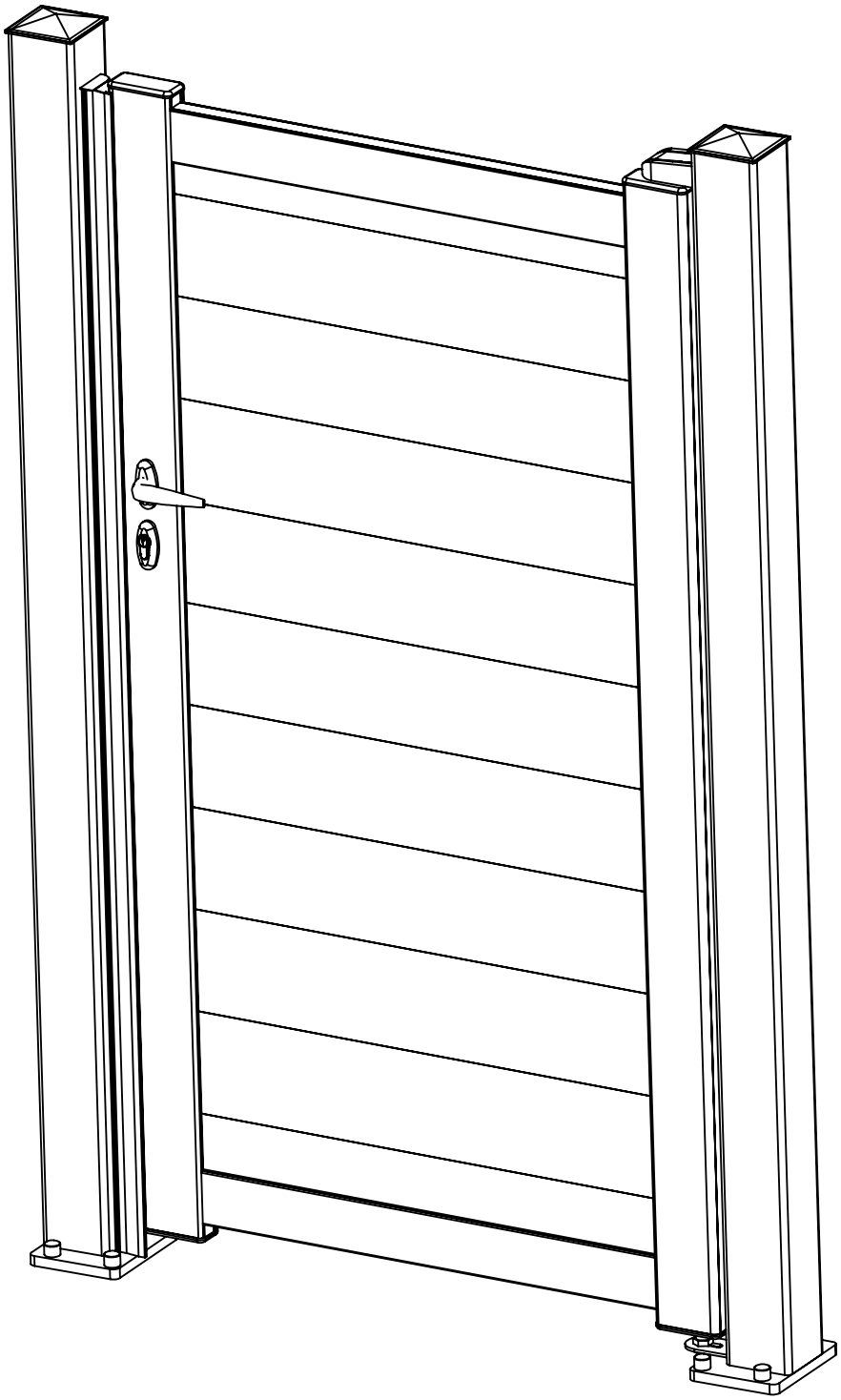

Savadeck™

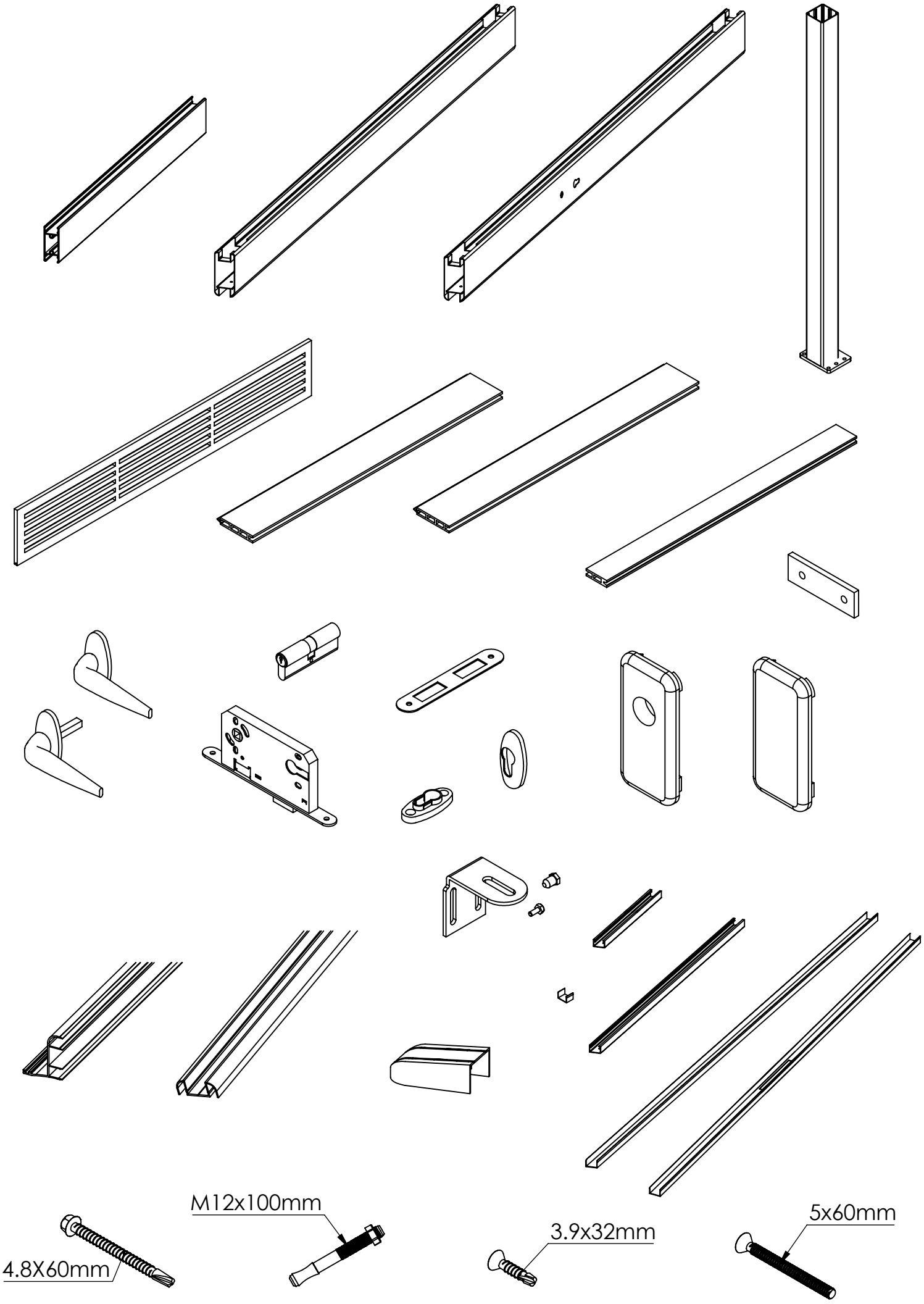
M12x100mm
3.9x32mm
5x60mm
4.8X60mm

1.

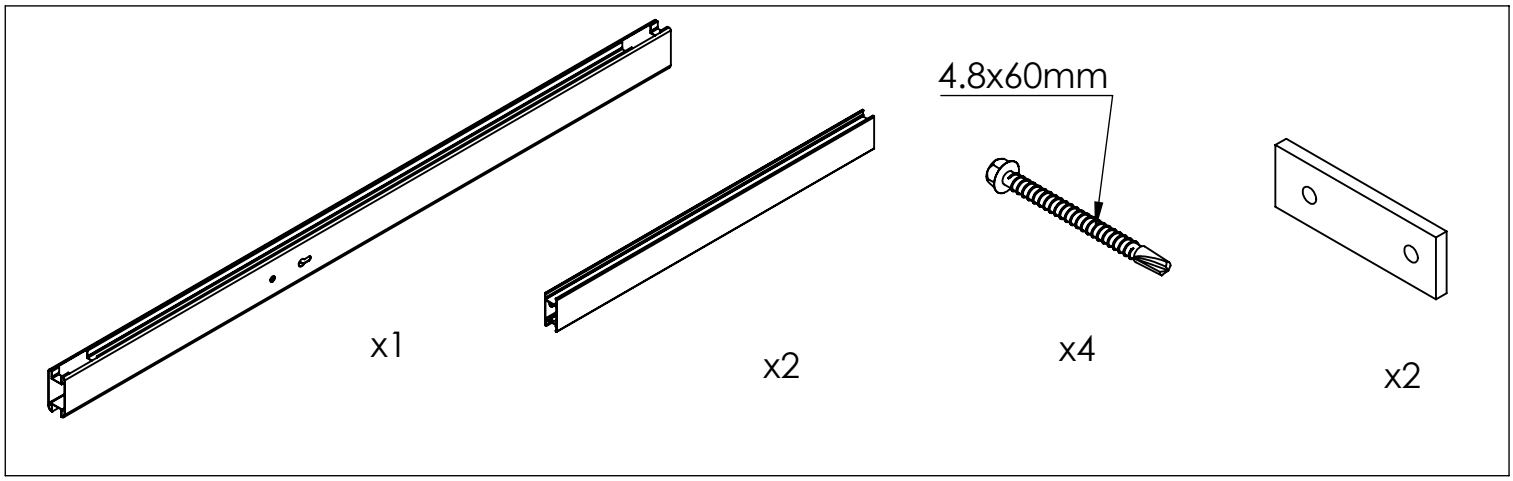

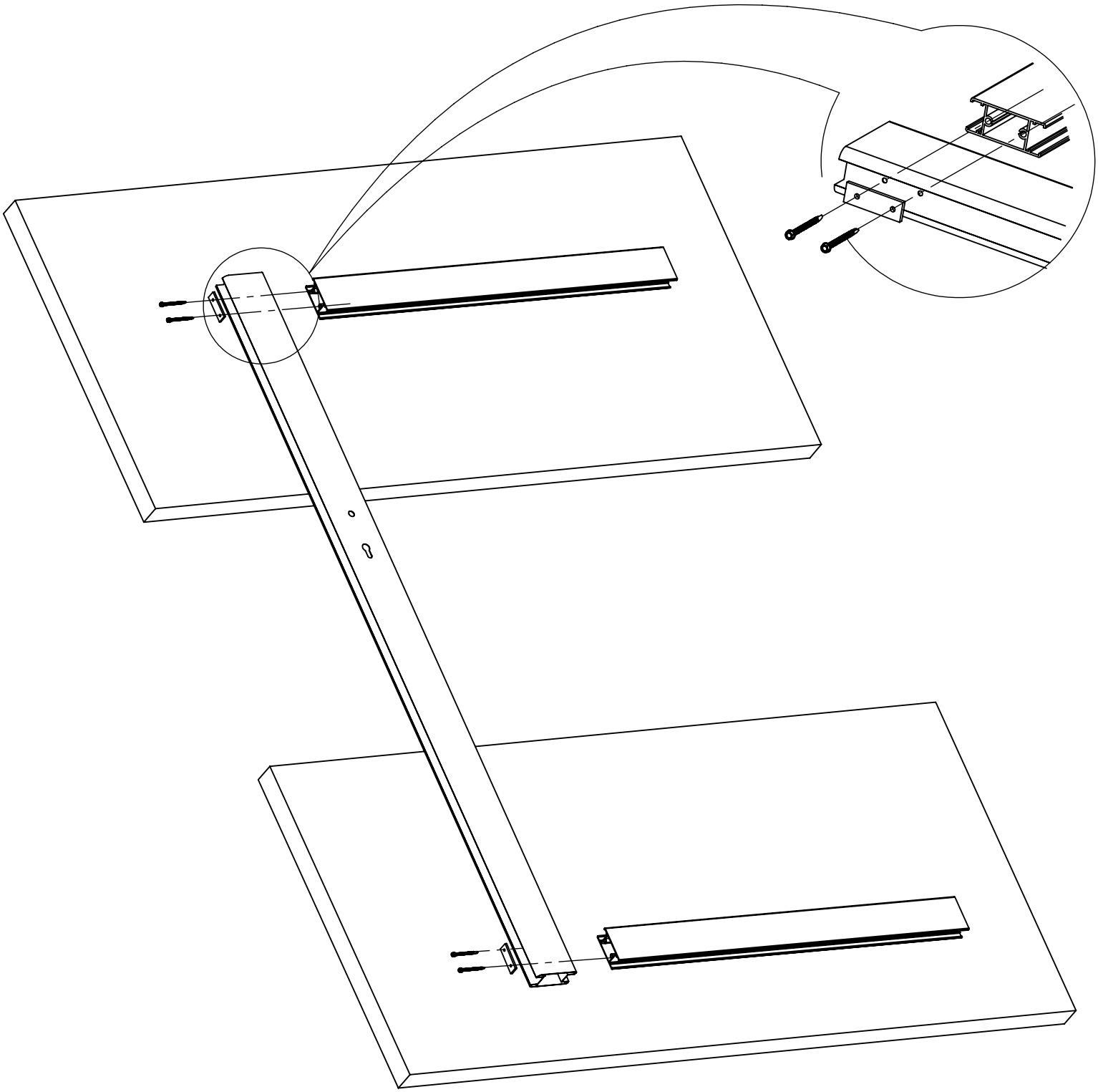

2.

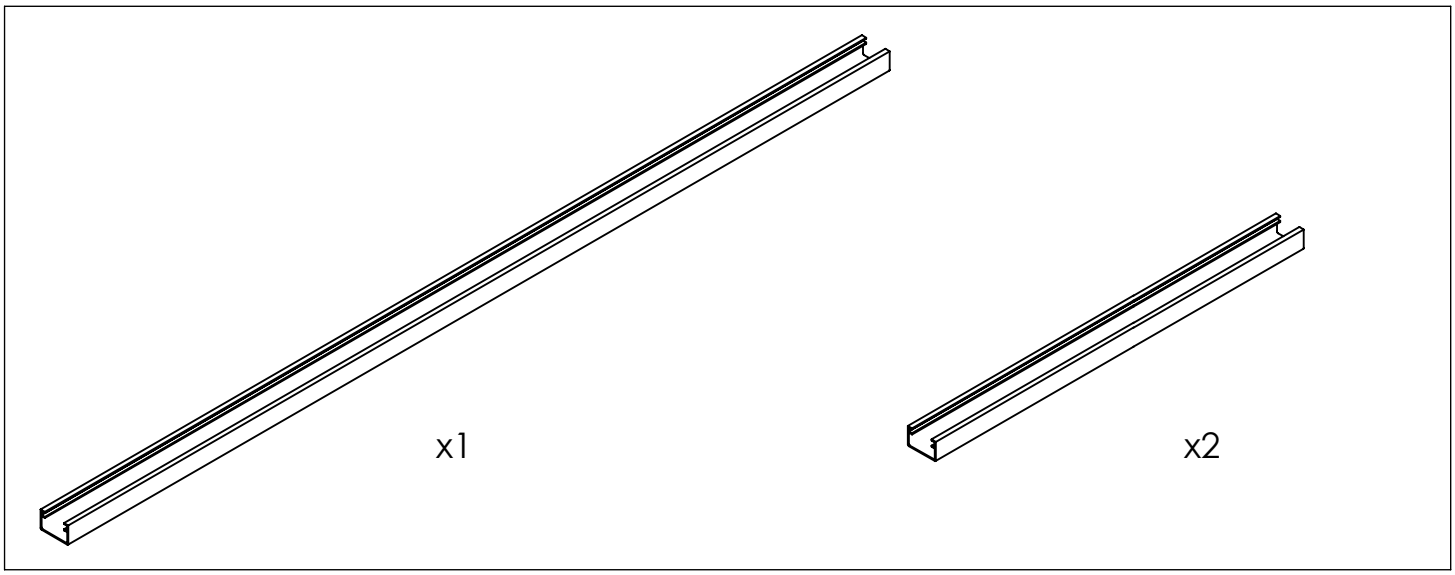

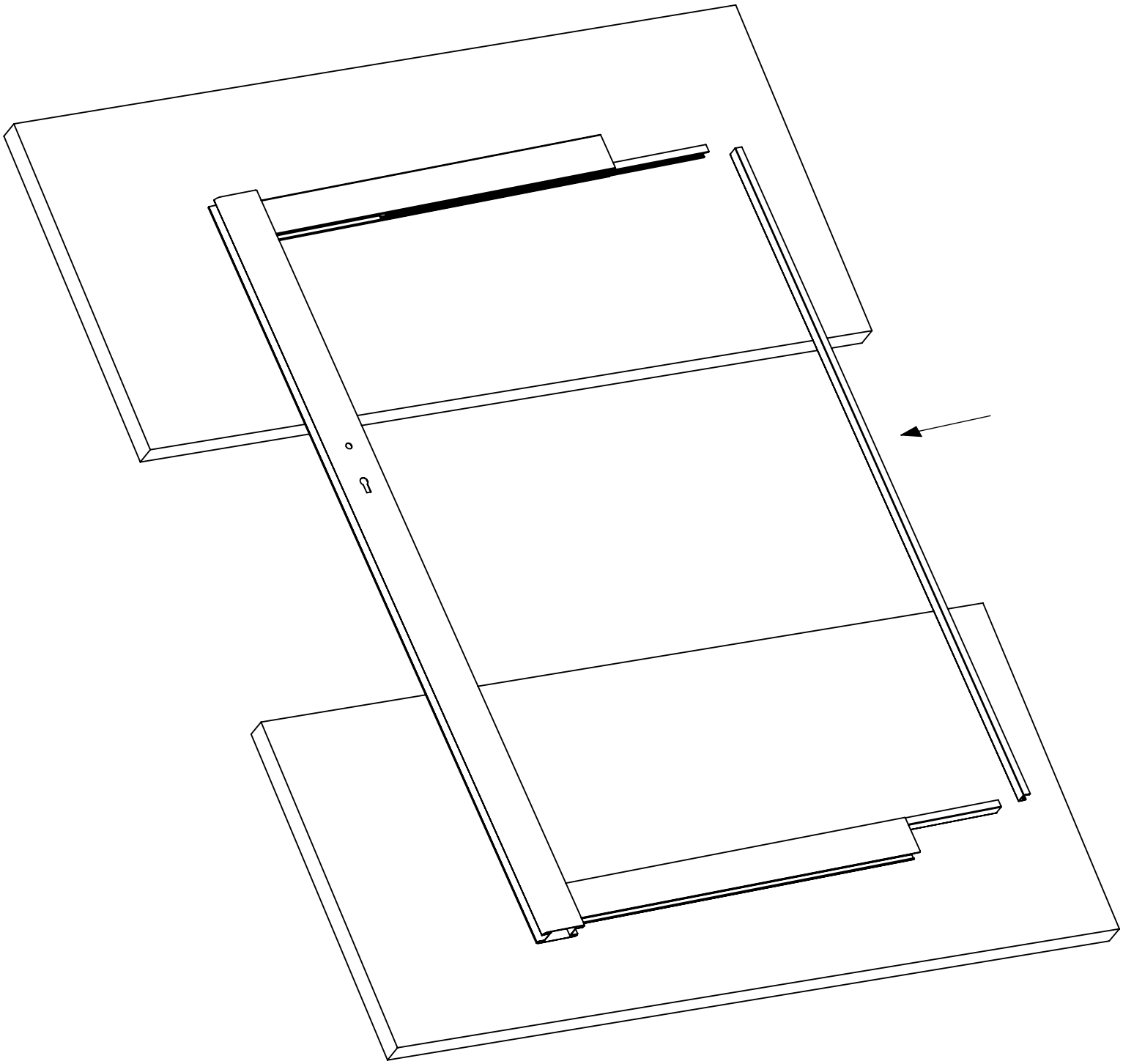

3.

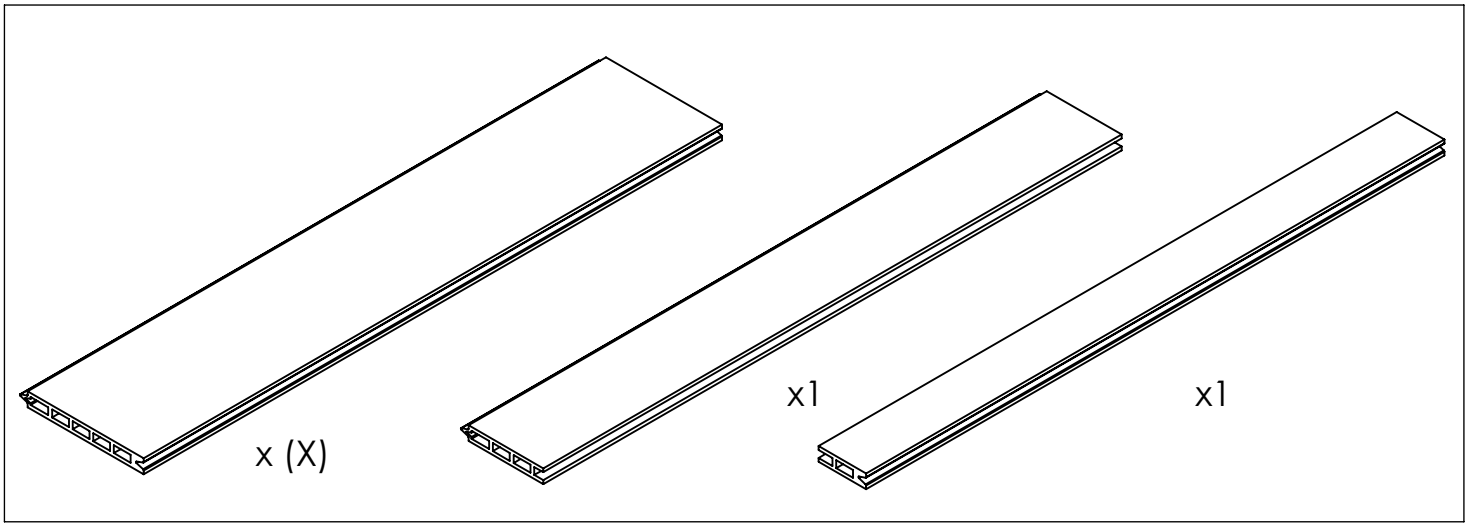

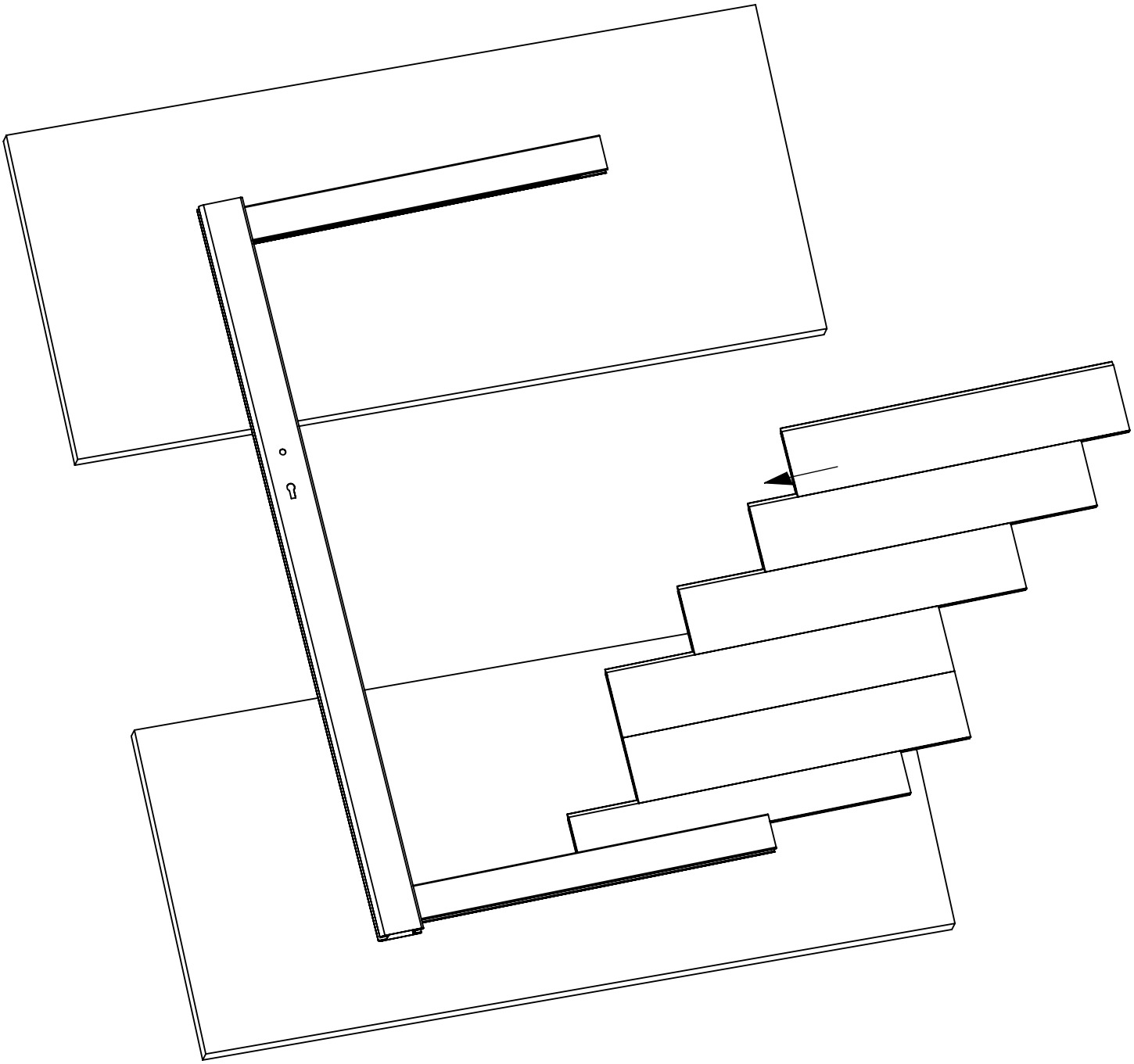

4.

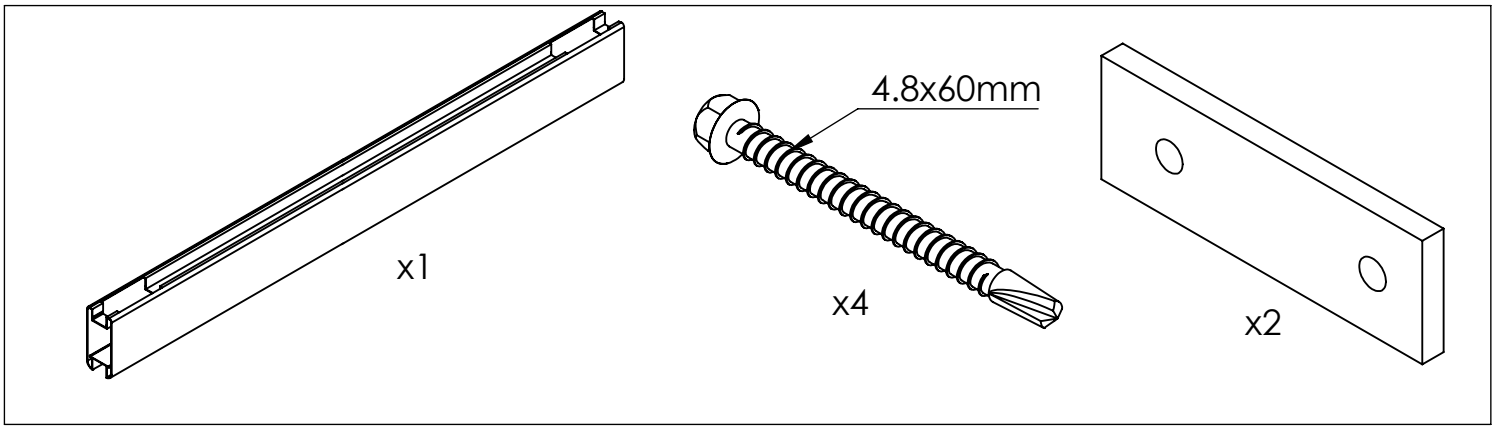

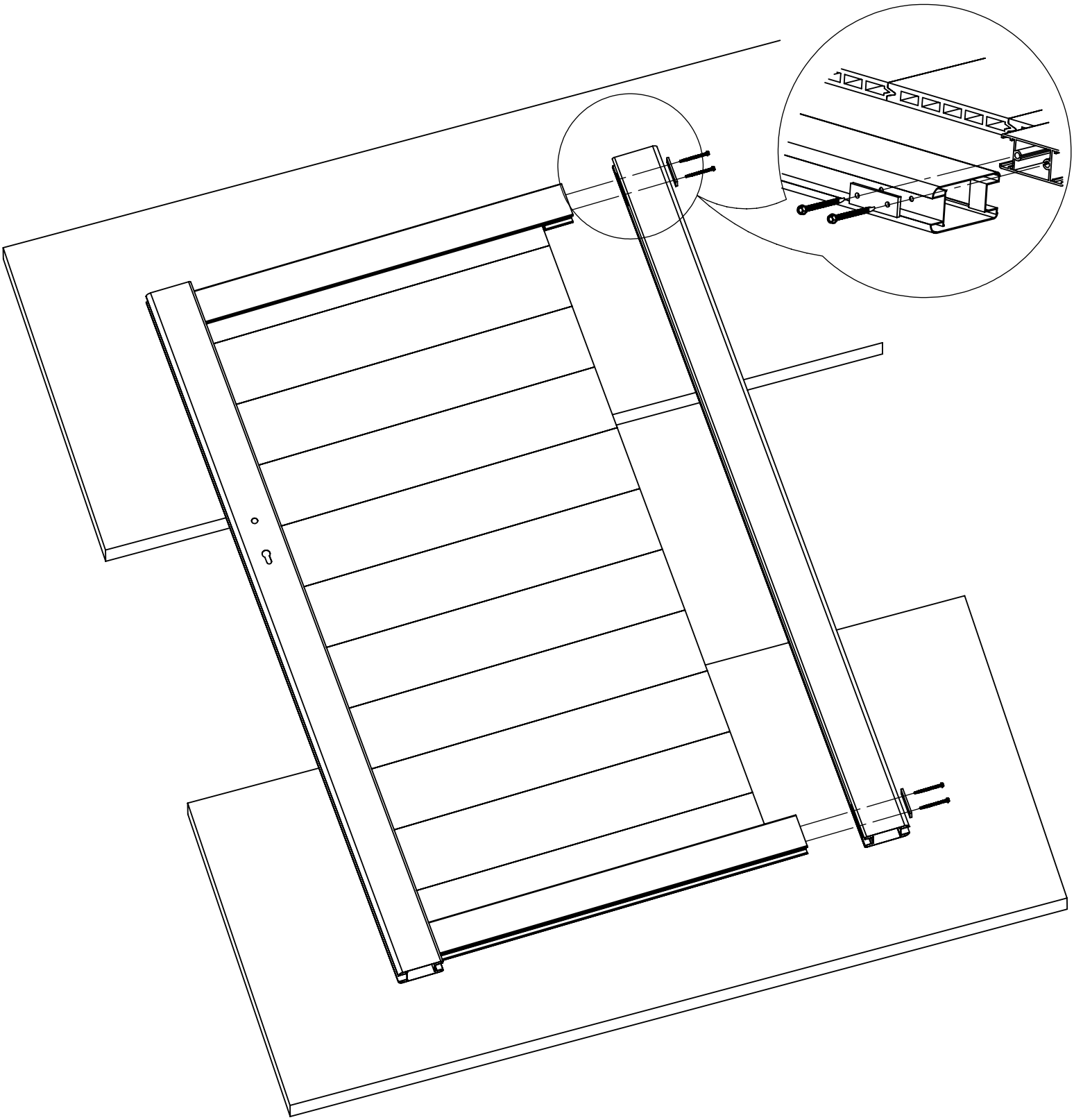

5.

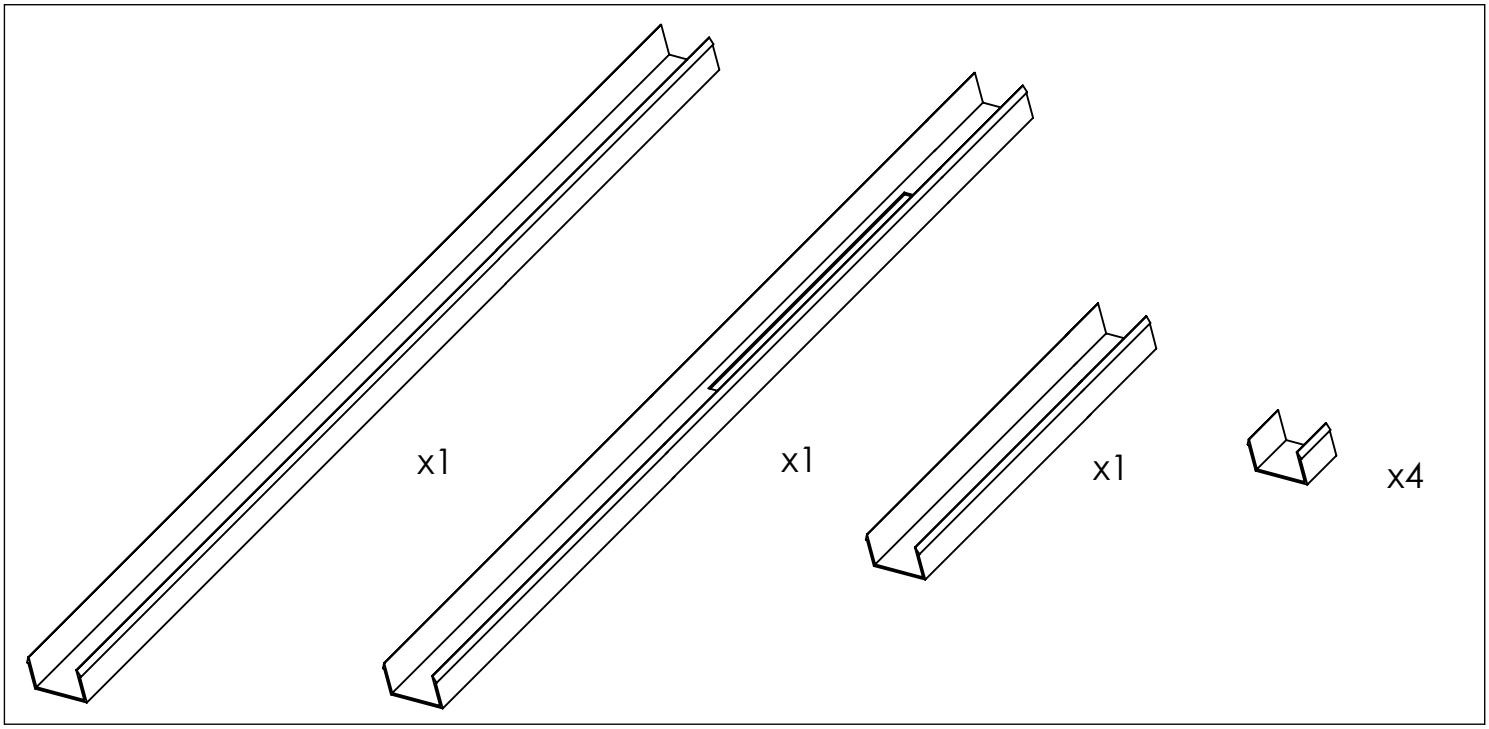

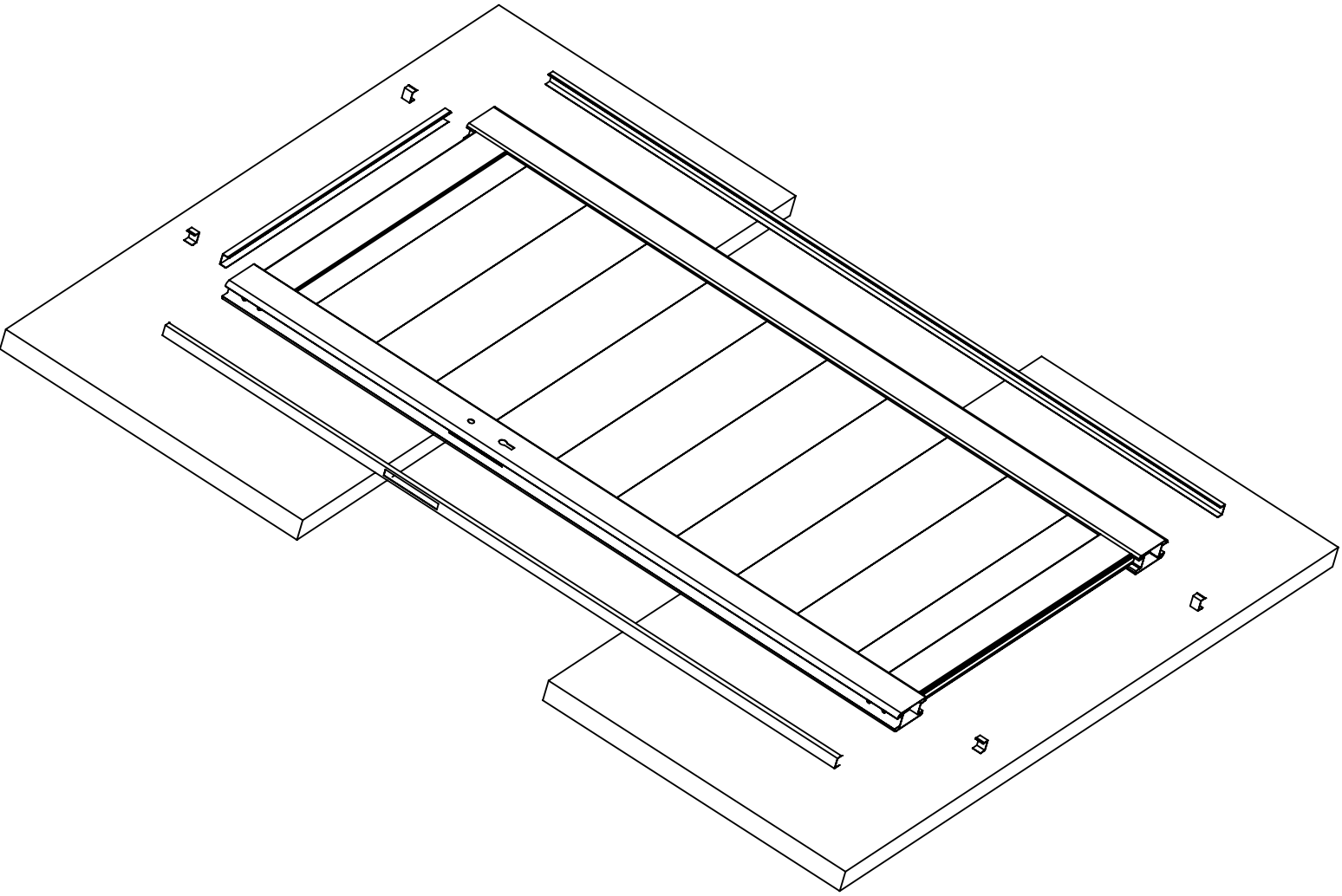

6.

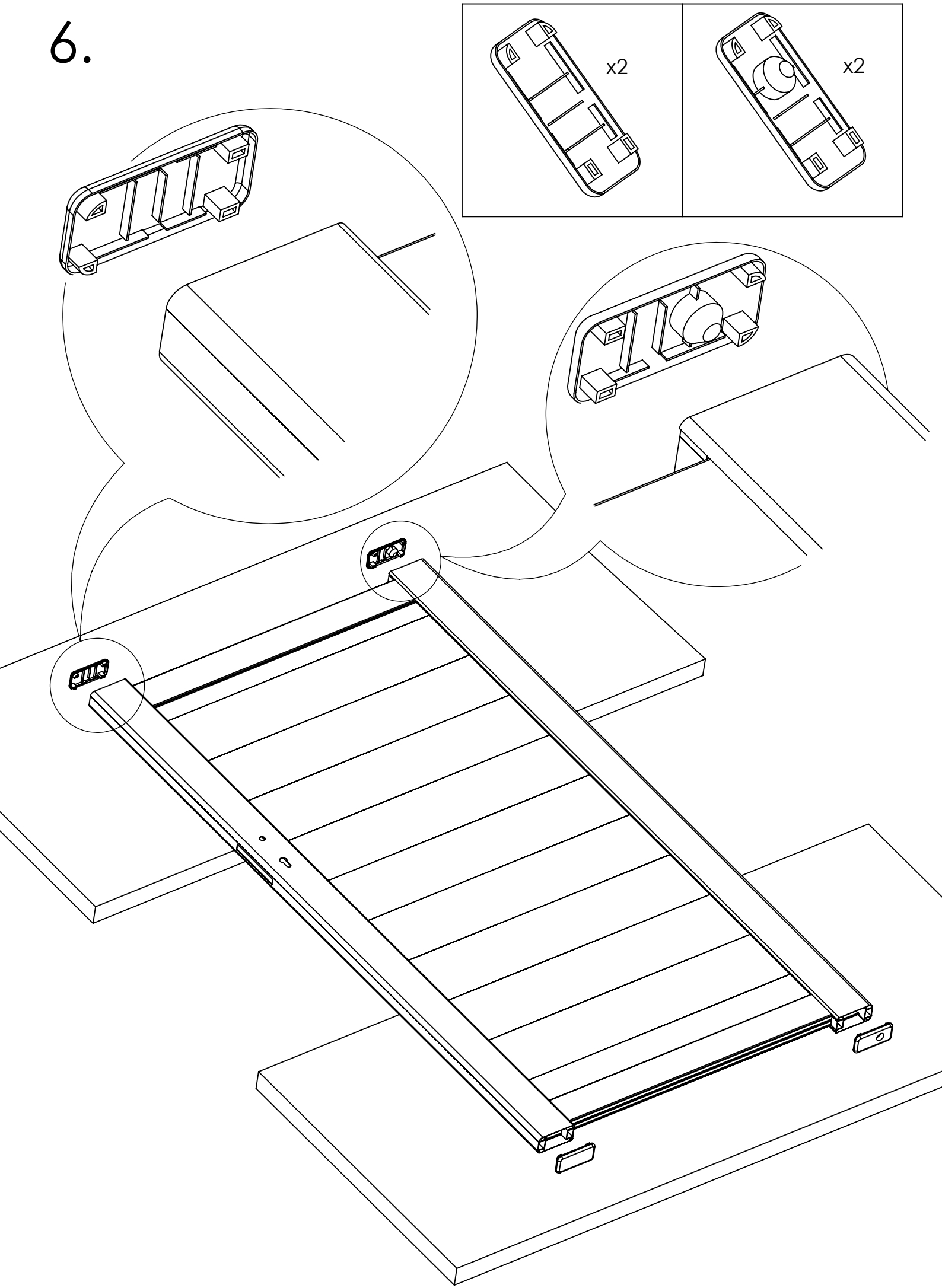

7.

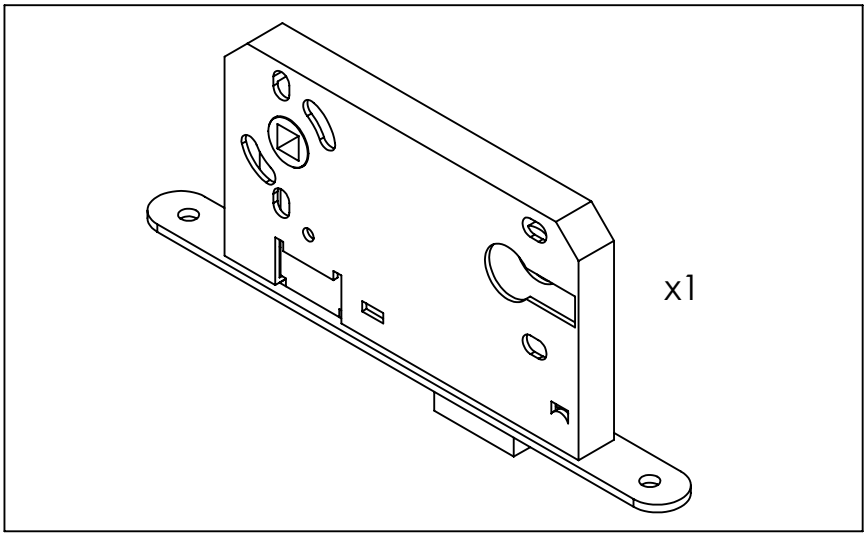

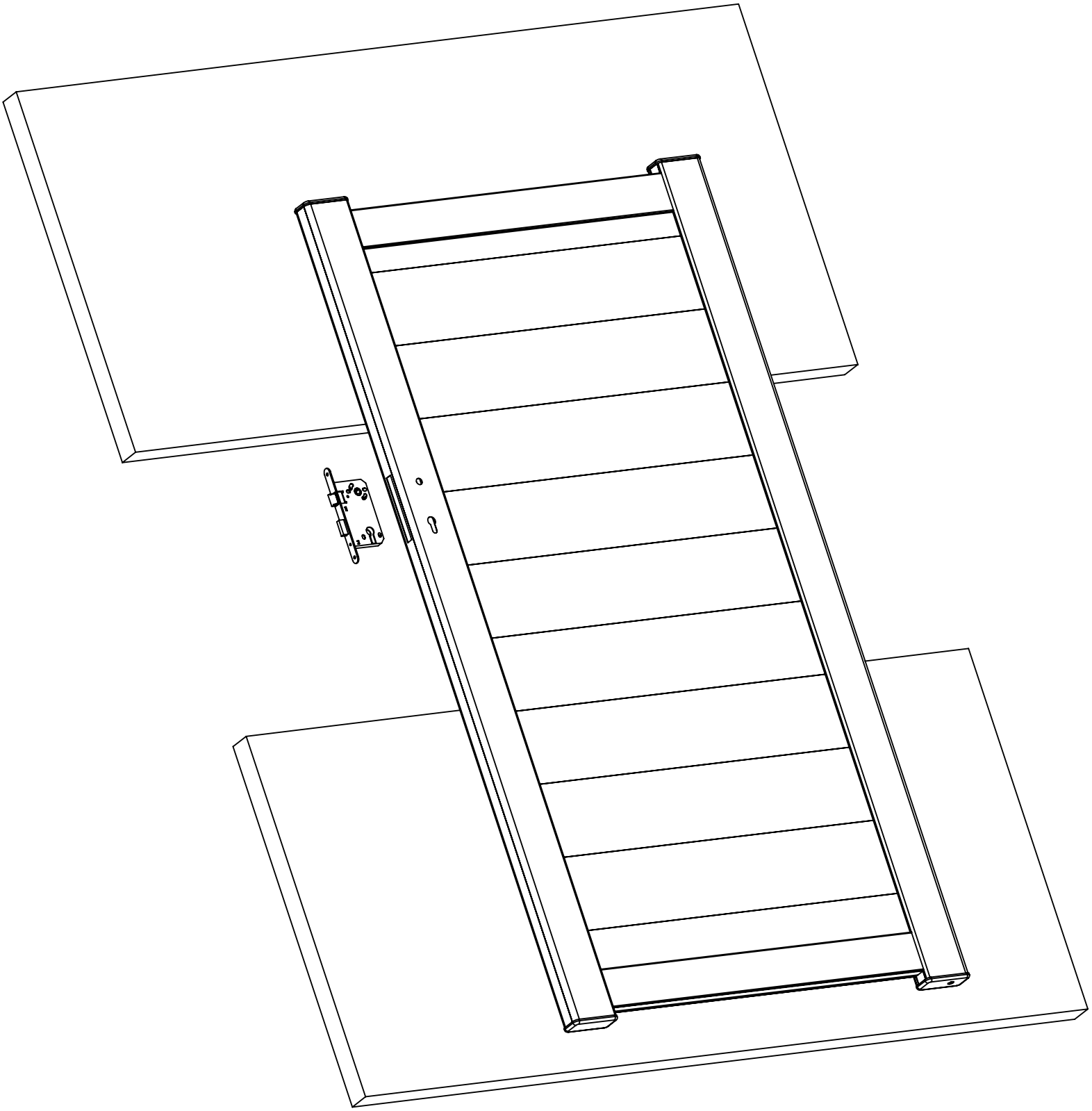

8.

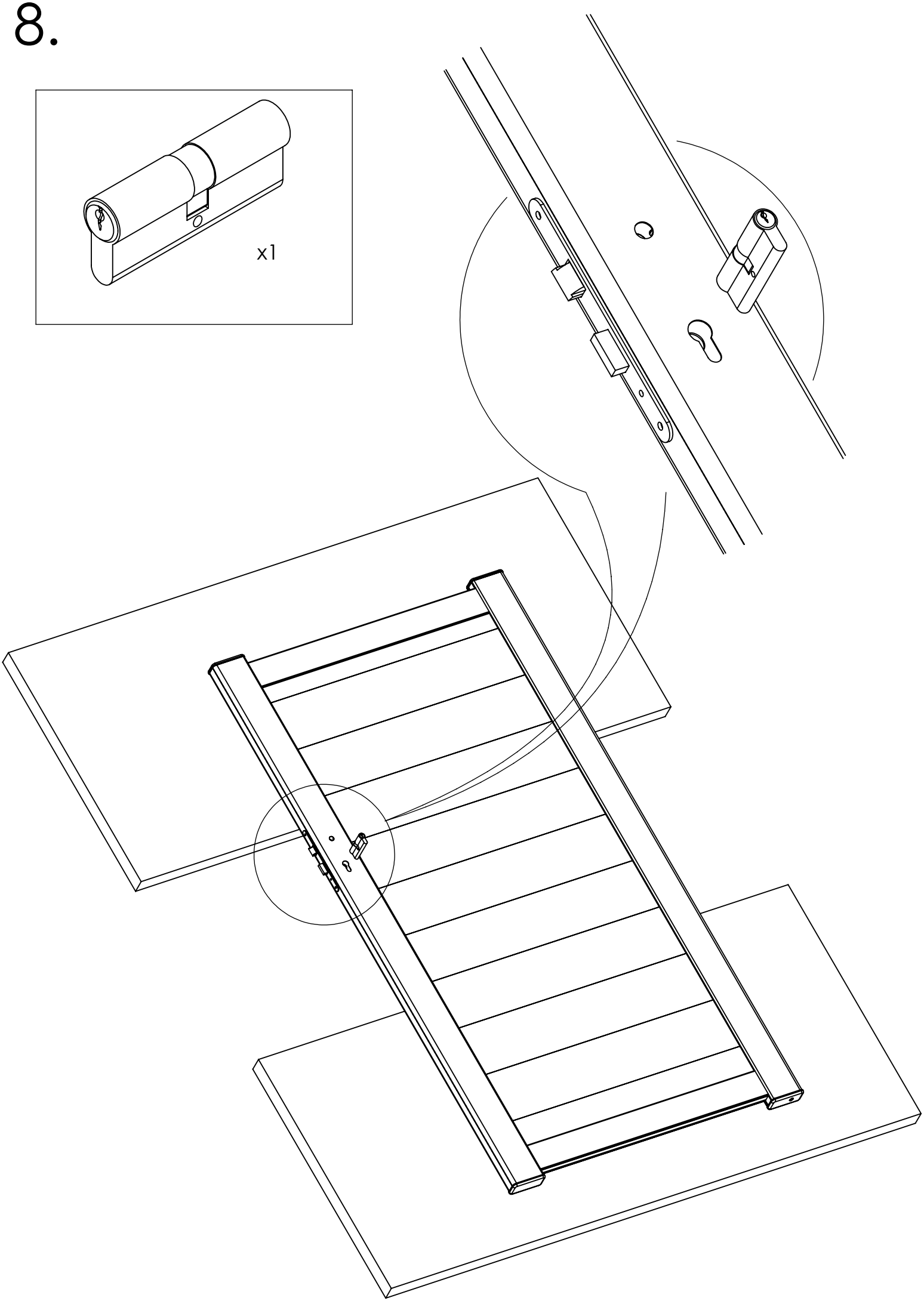

9.

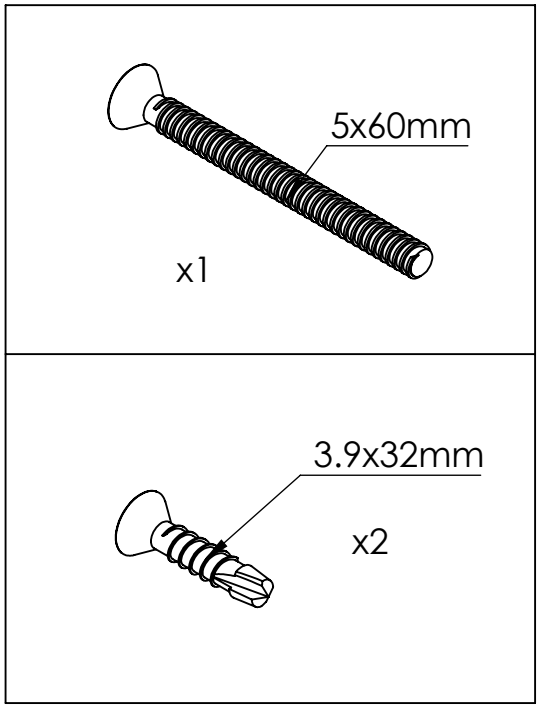

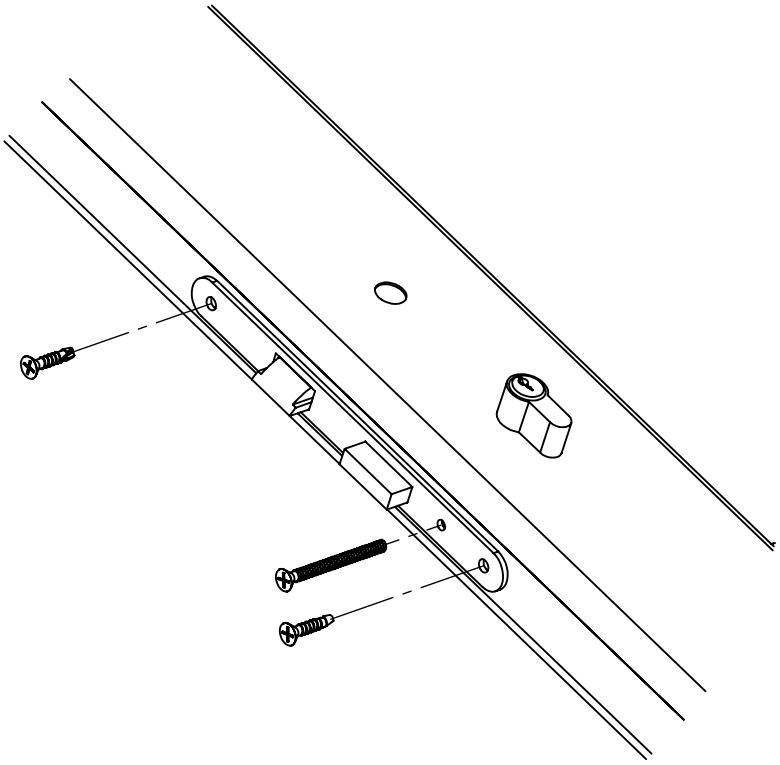

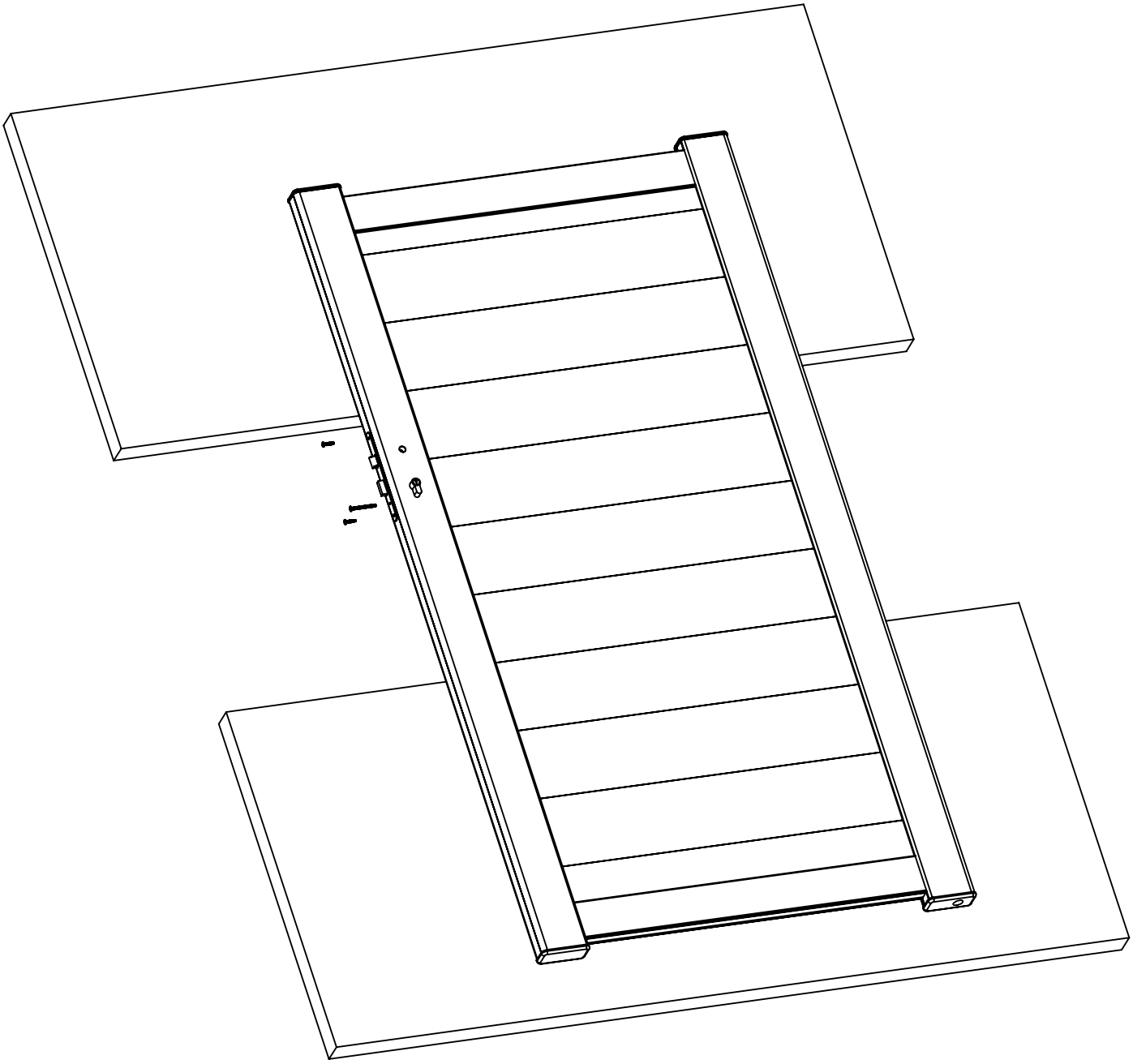

10.

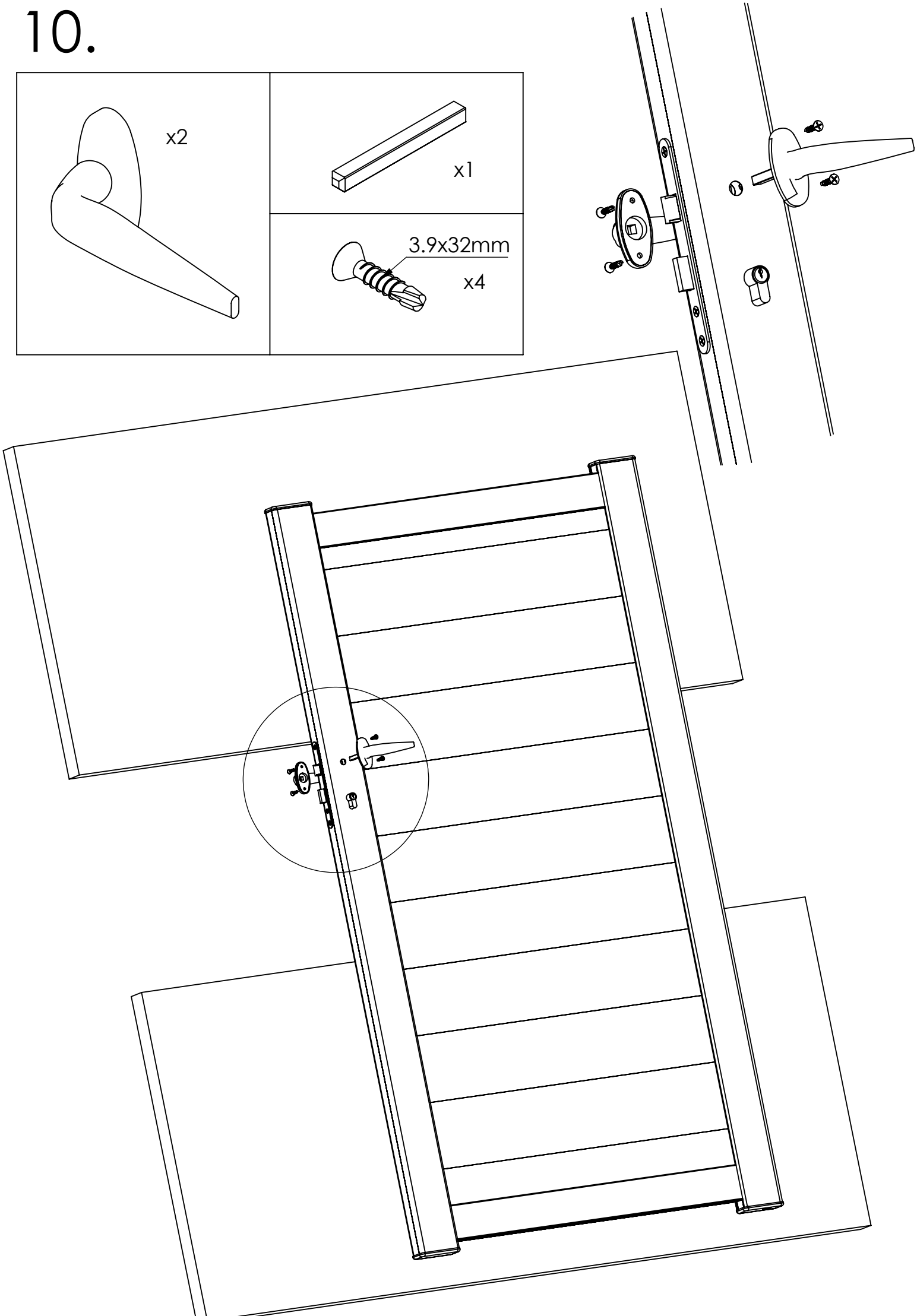

11.

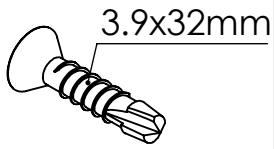 x4	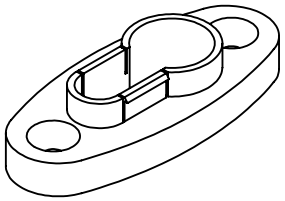 x2	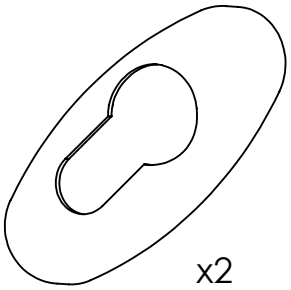 x2

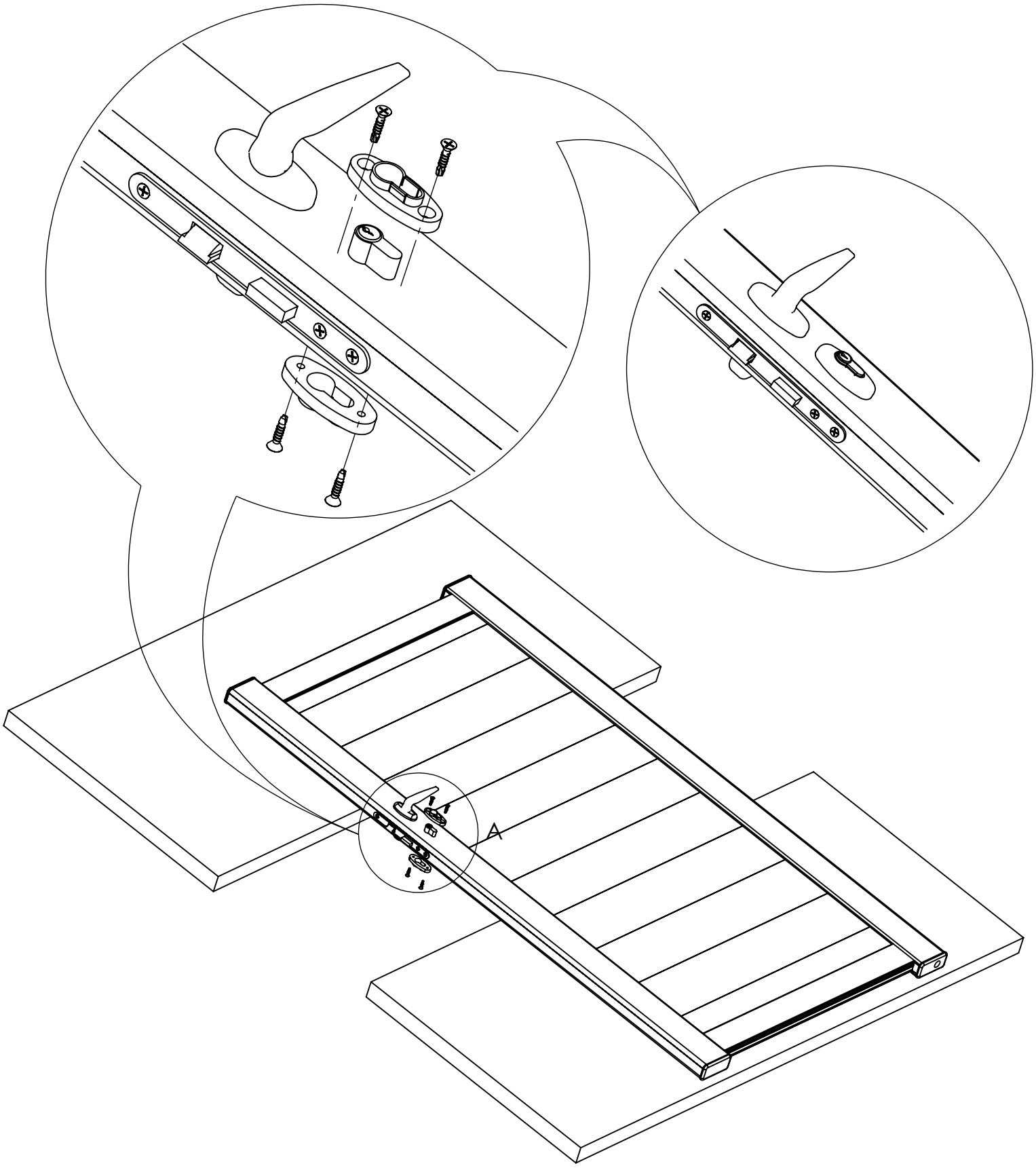

12. a)

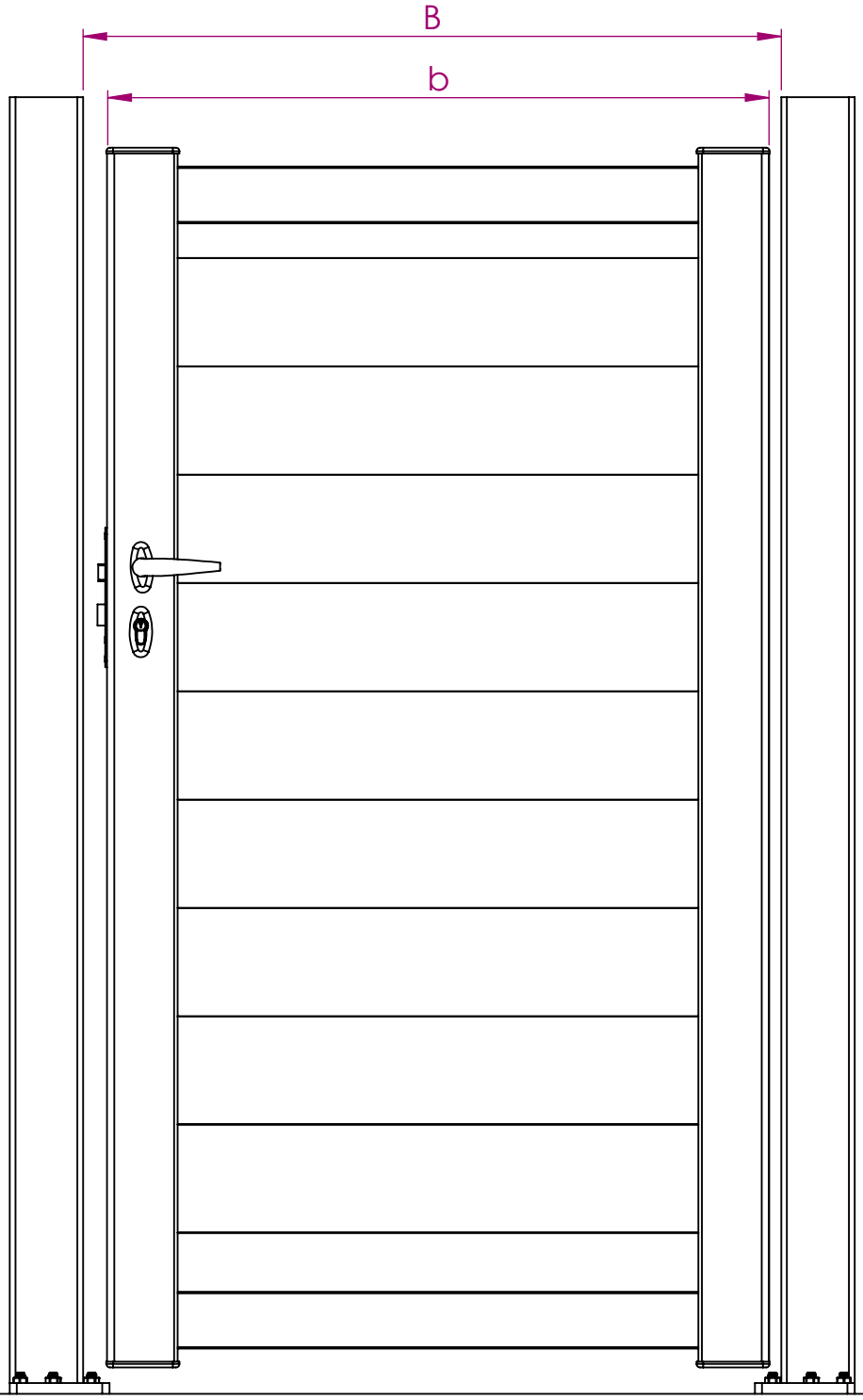

B=b+5cm

12.

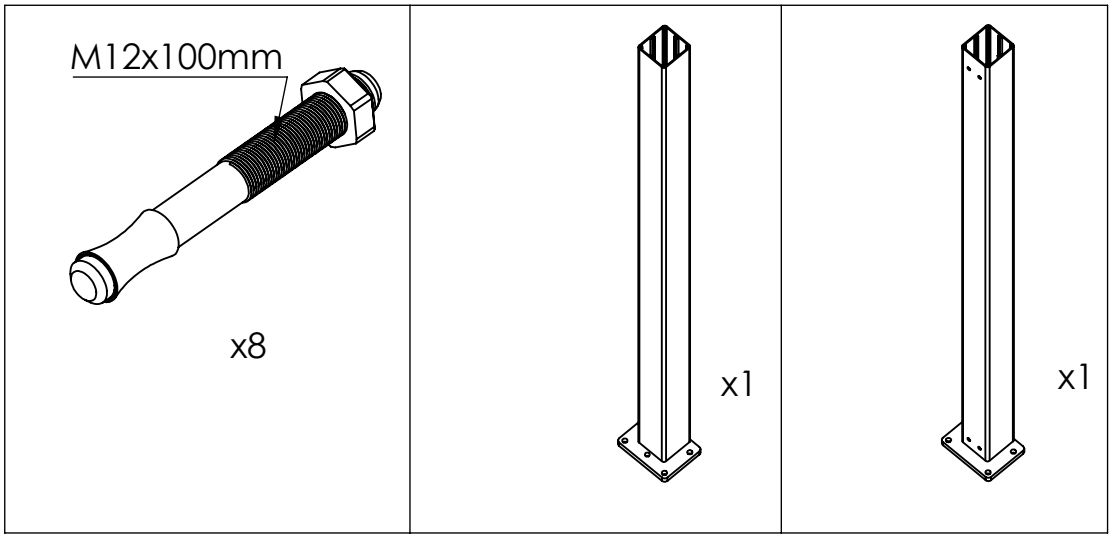

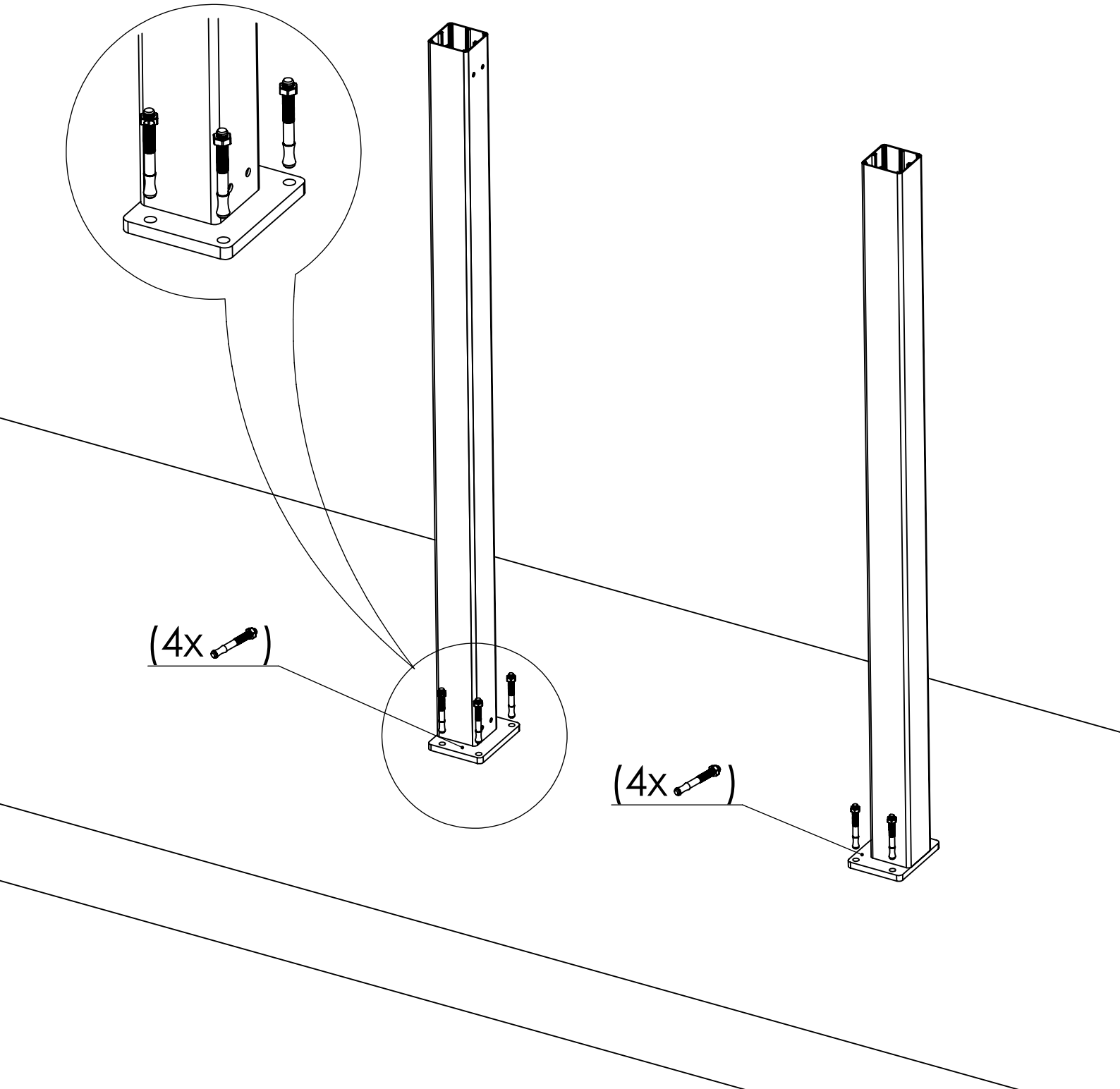

13.

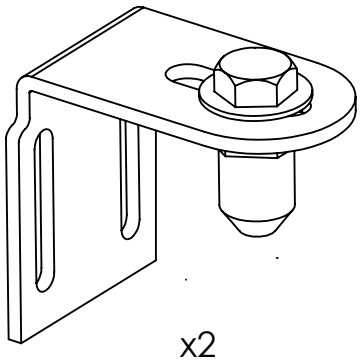 x2	M6x25 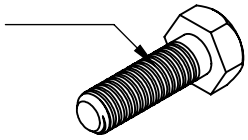 x4	M6 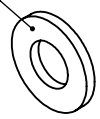 x4

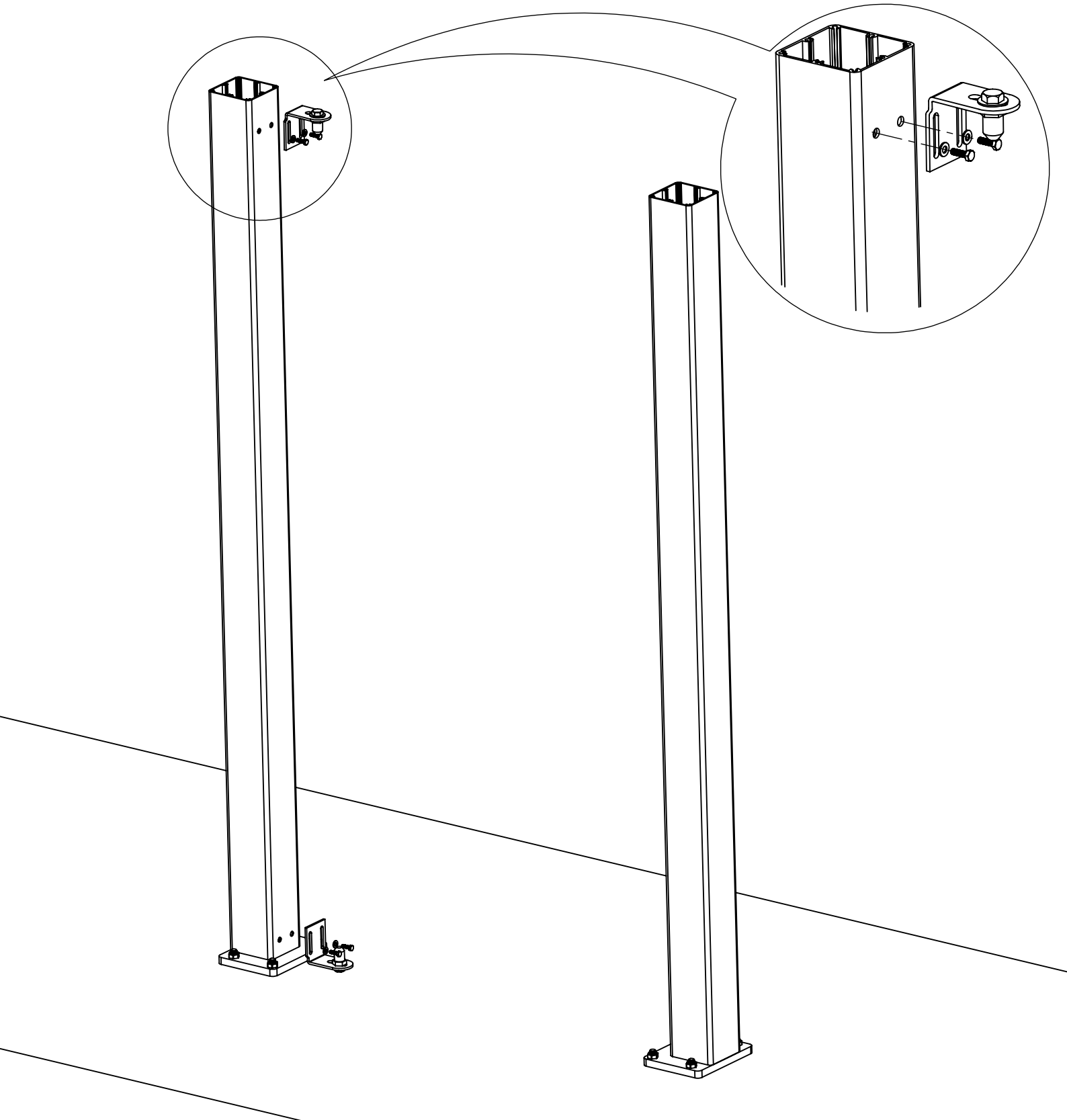

14. a)

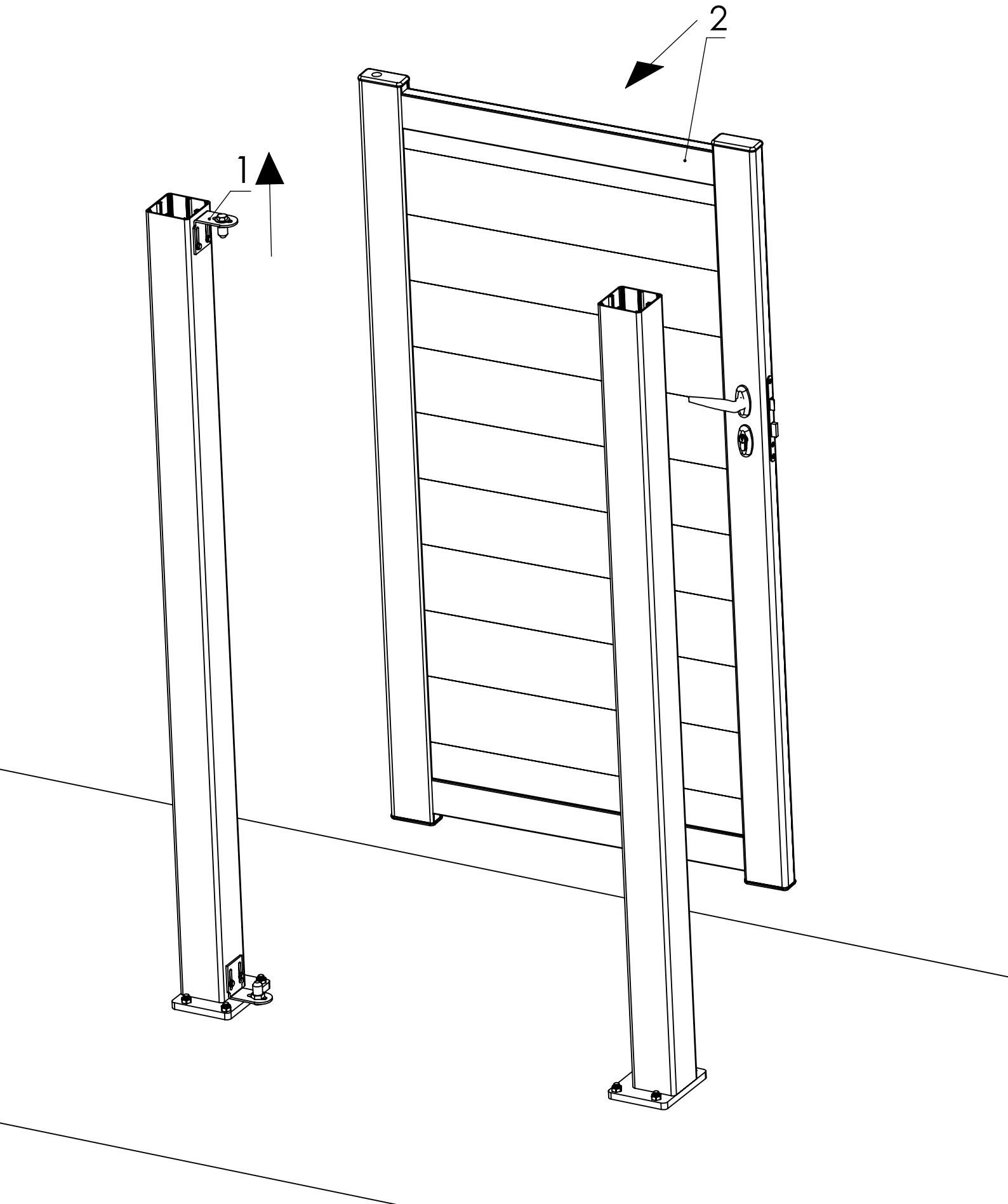

14.

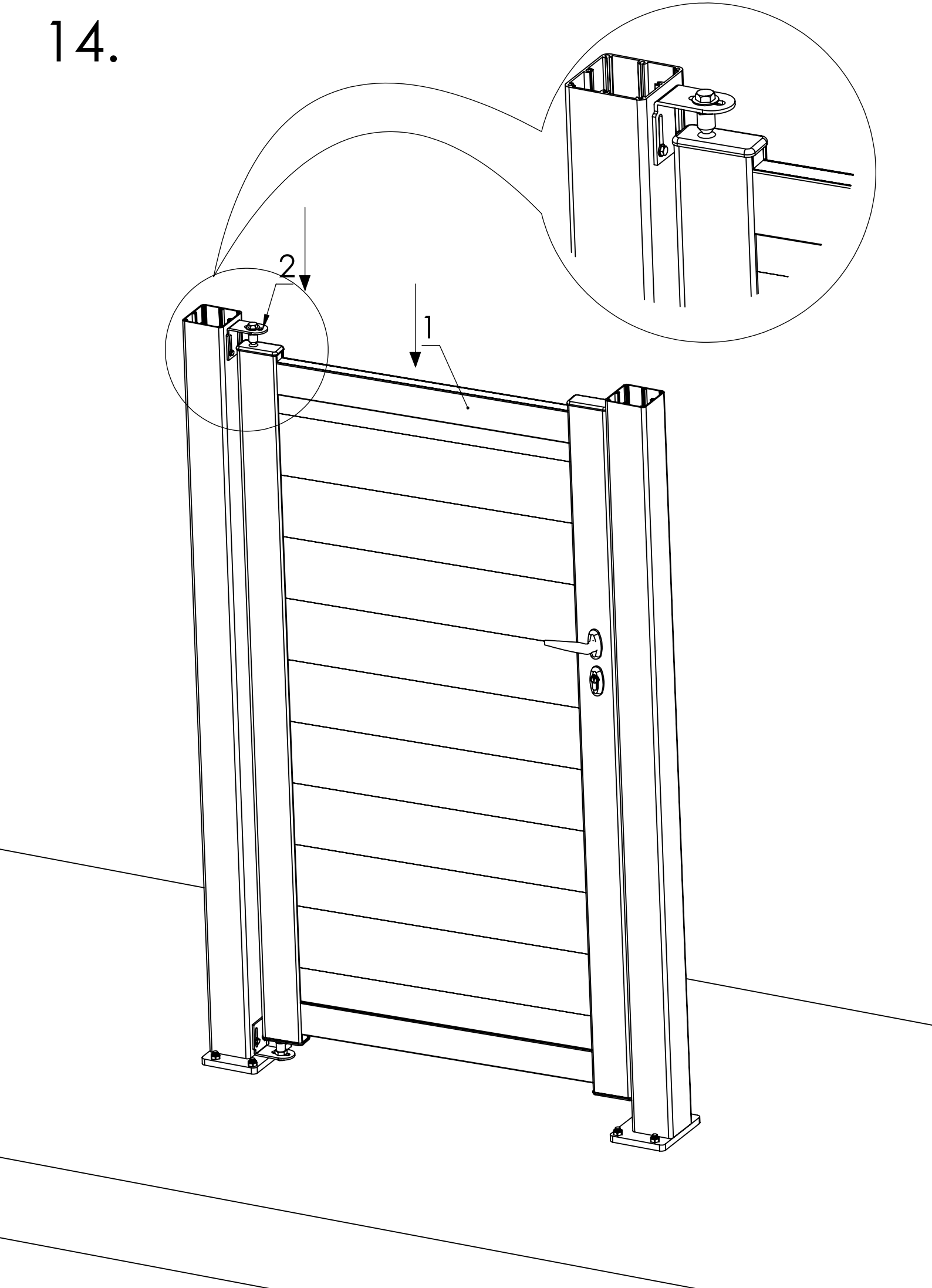

15.

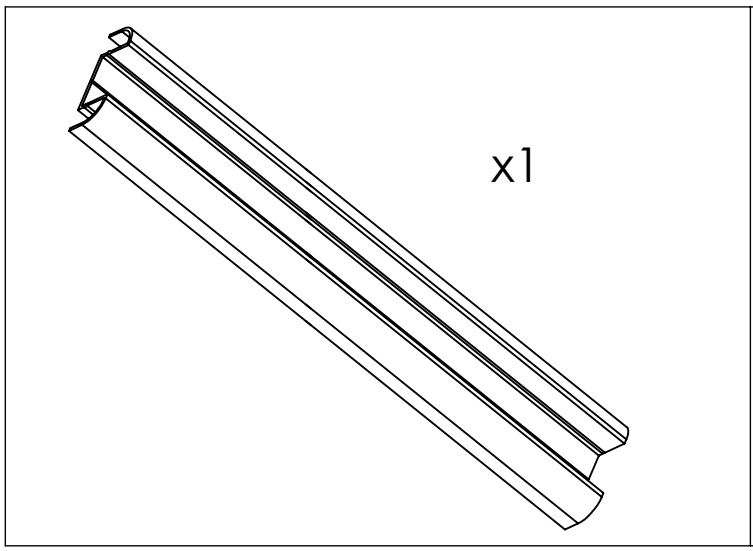

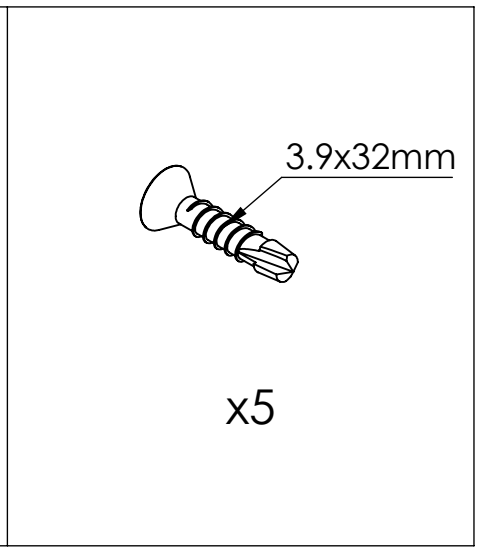

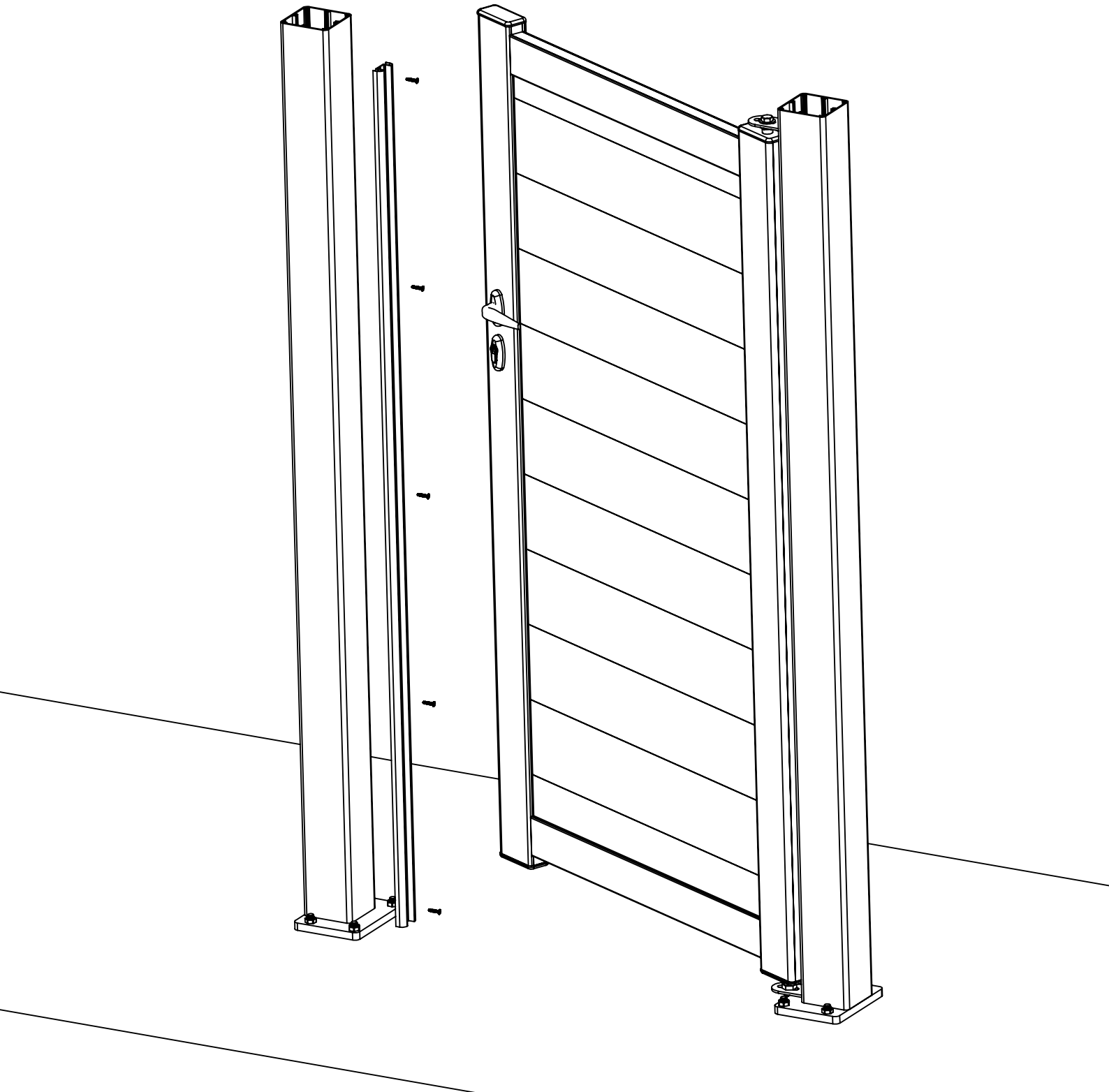

16.

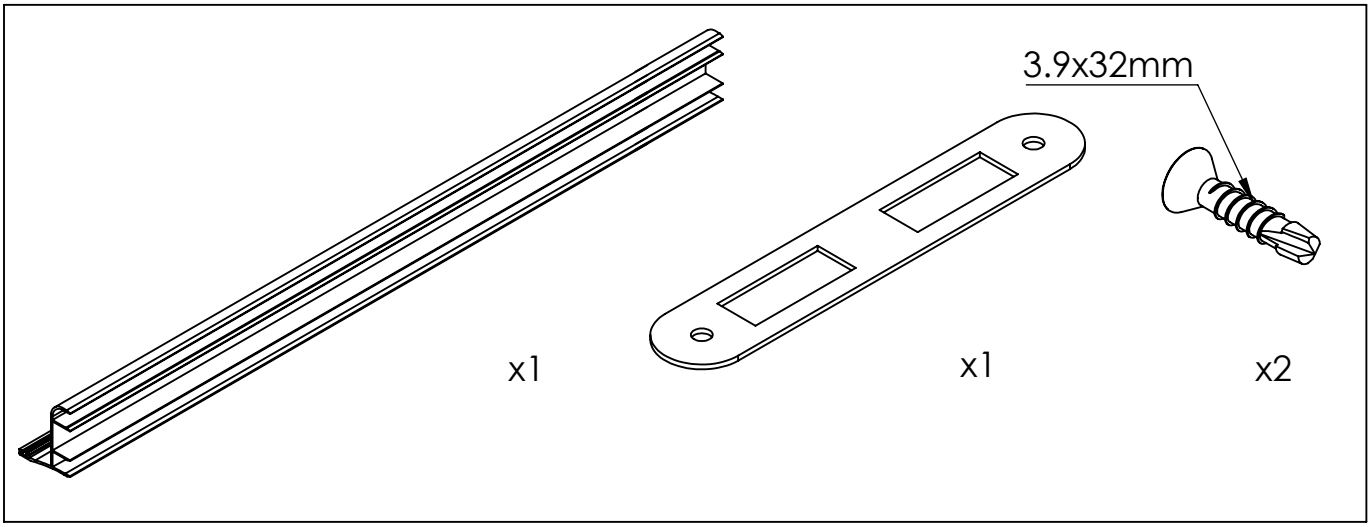

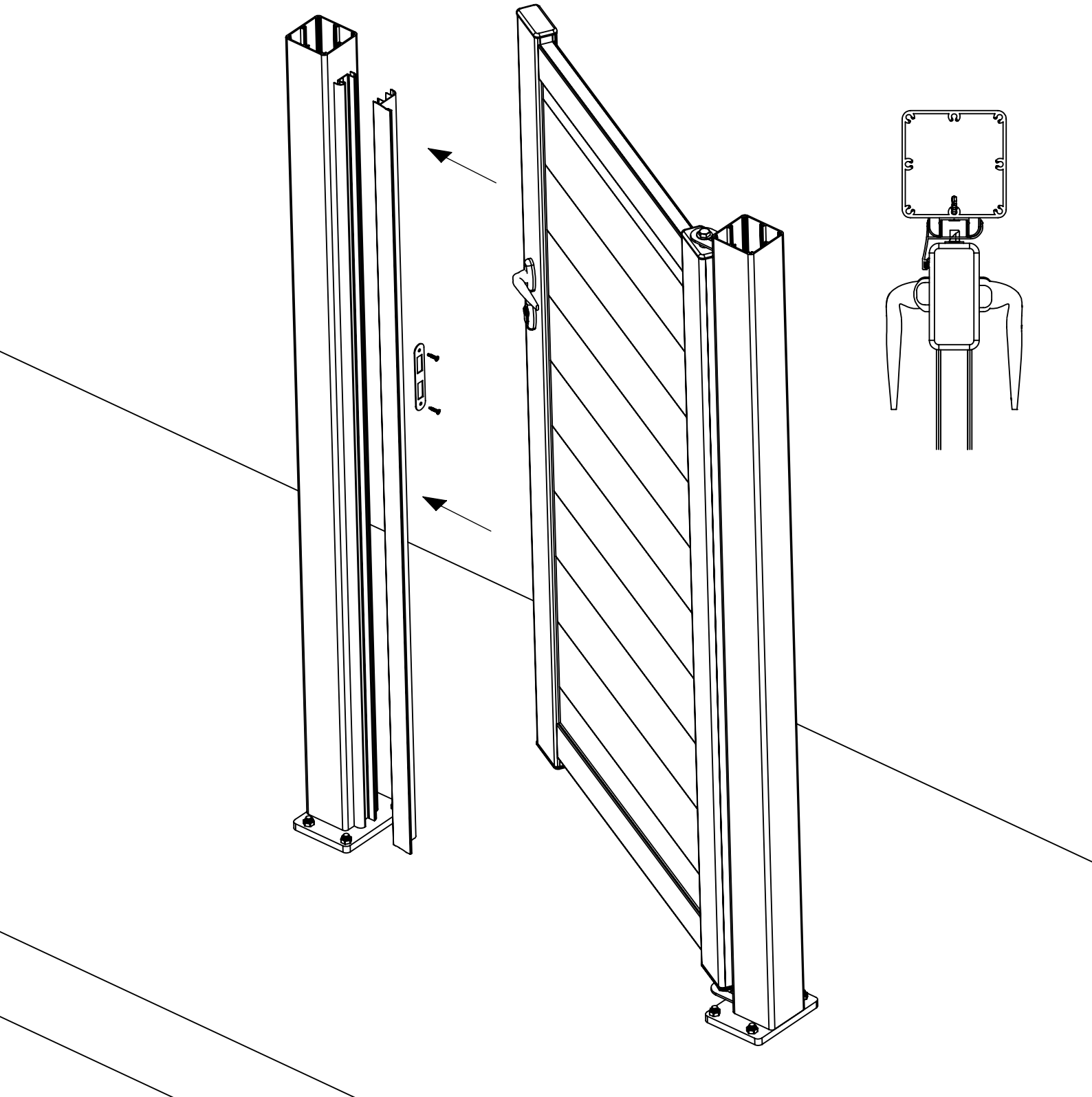

17.

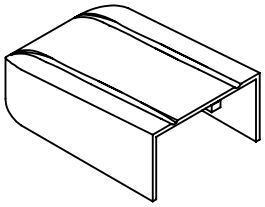	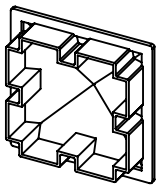	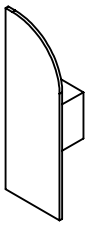	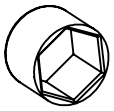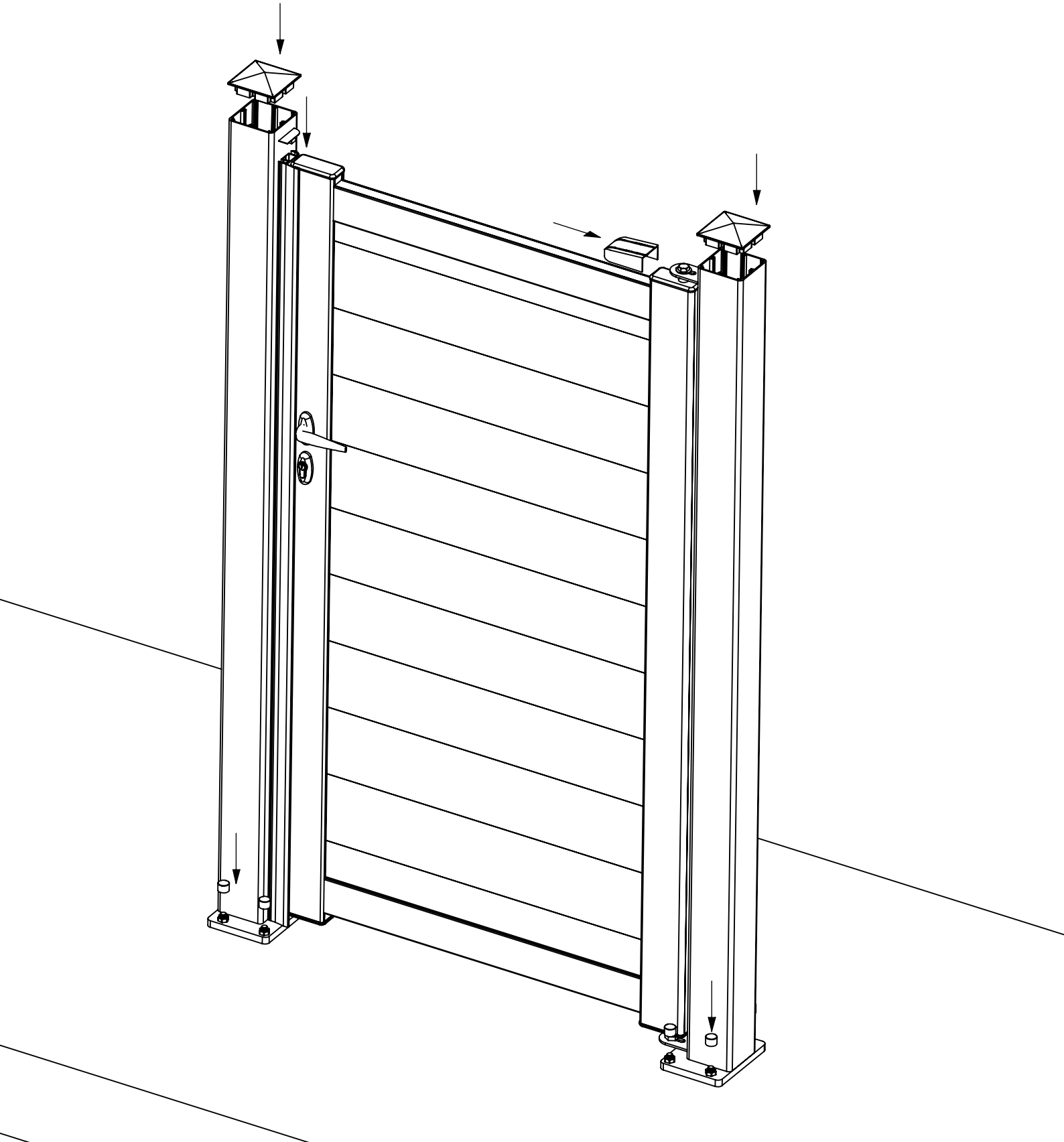
x1	x2	x1	x8