Hardwood deck installation

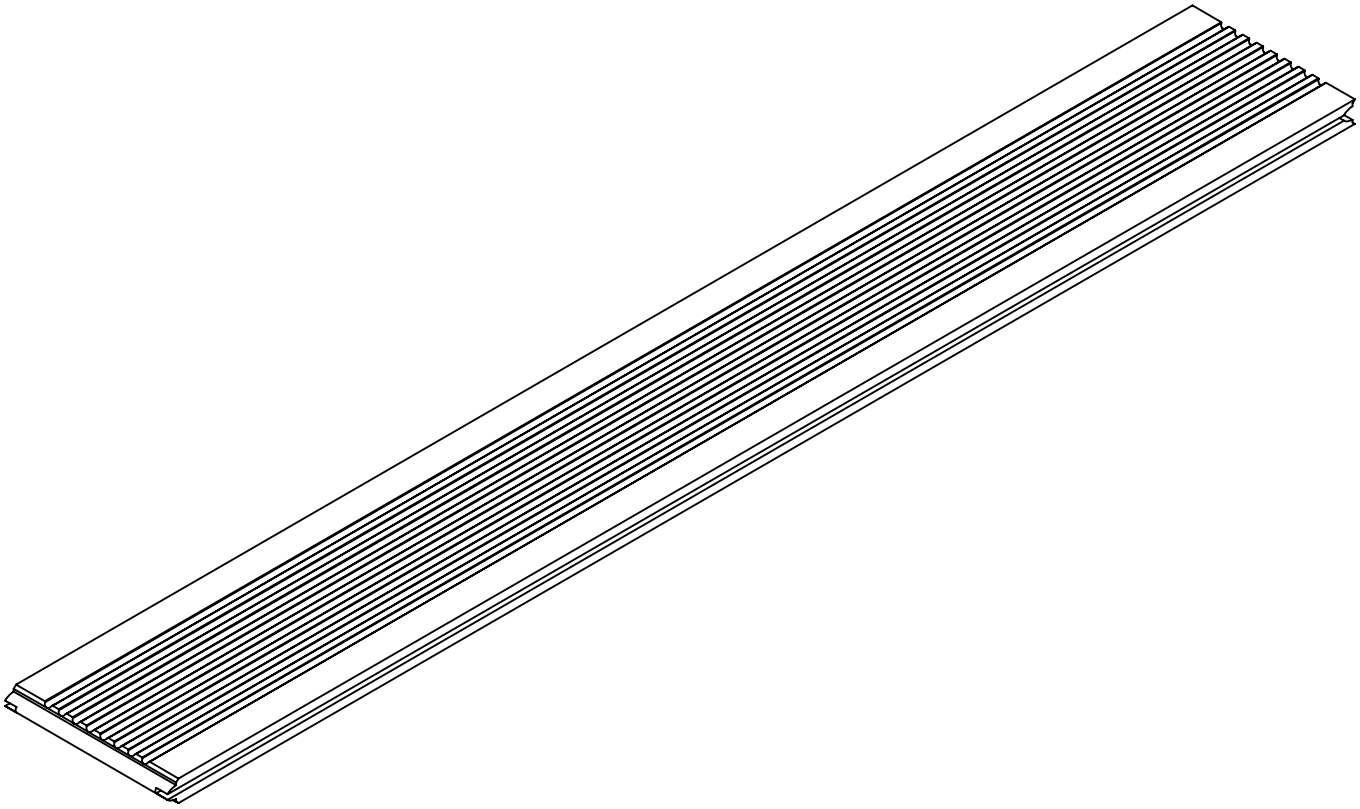

DO11122025

Savadeck™

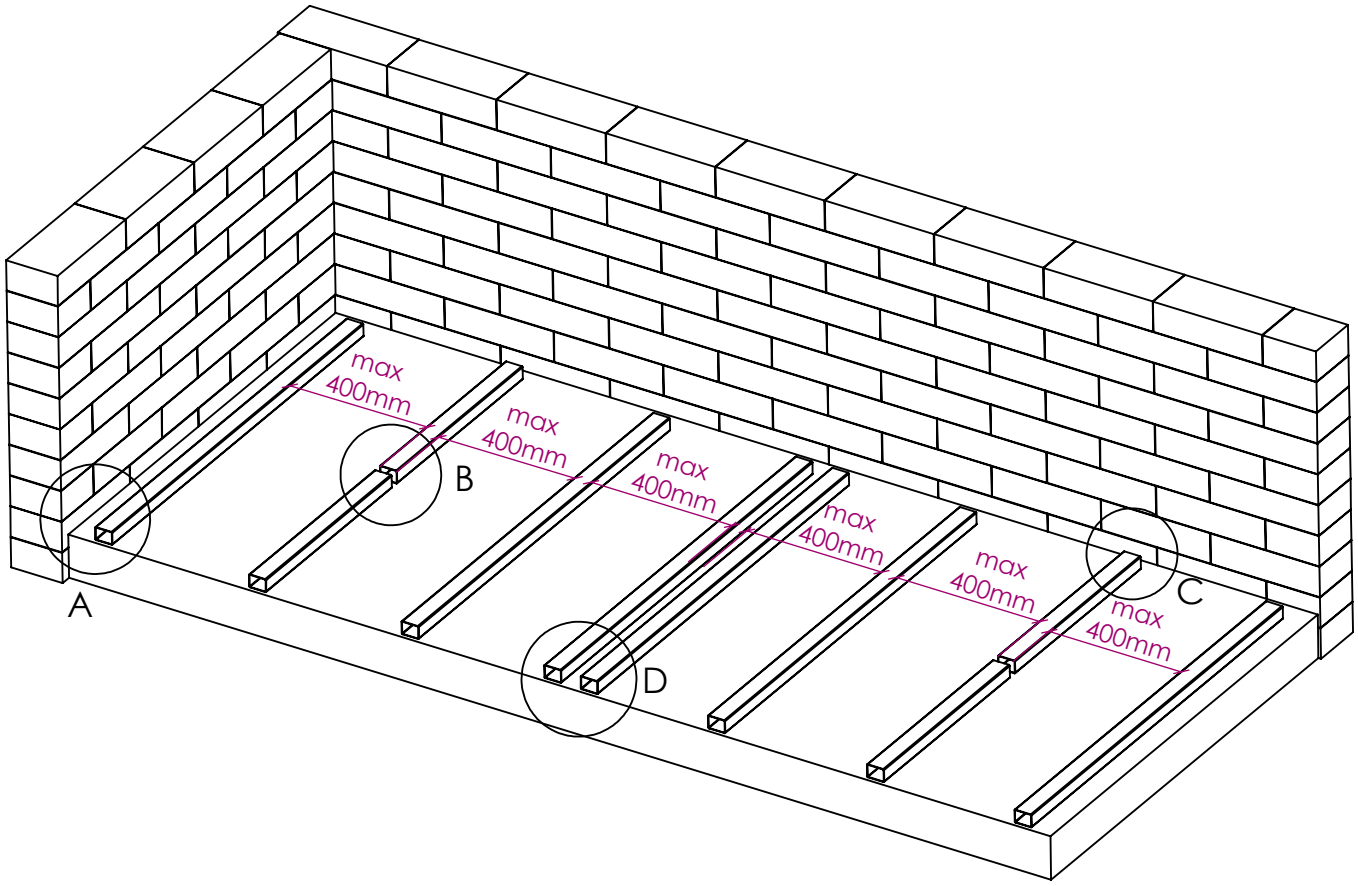
max
400mm
max
400mm
max
400mm
max
400mm
max
400mm
max
400mm
A
B
C
D

A

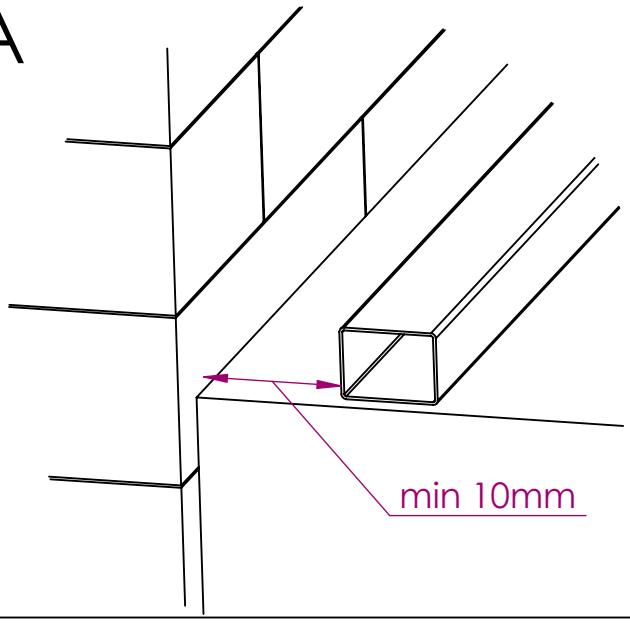
min 10mm

B

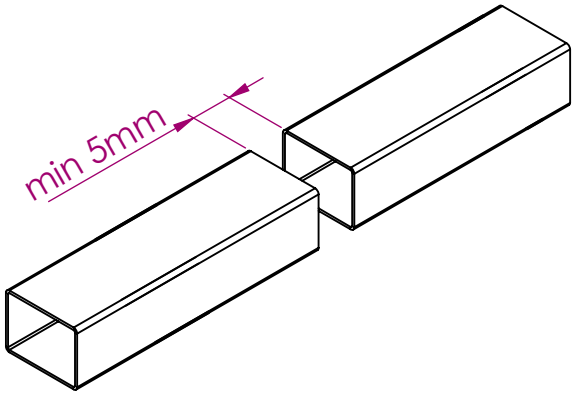
min 5mm

C

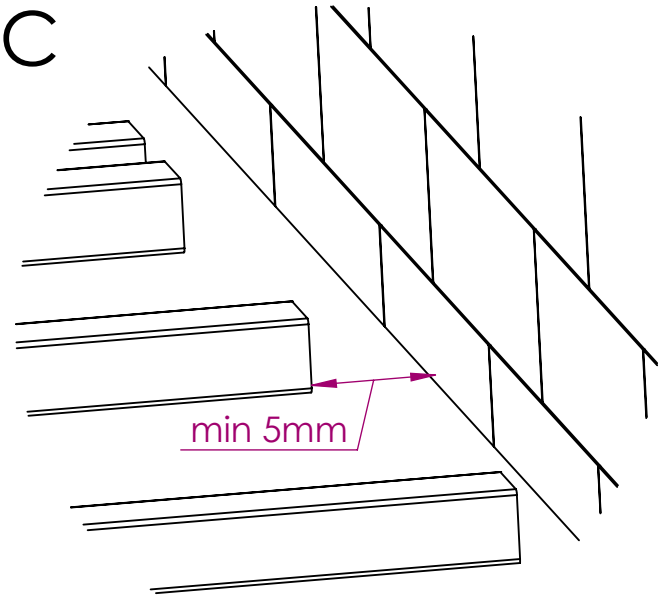
min 5mm

D

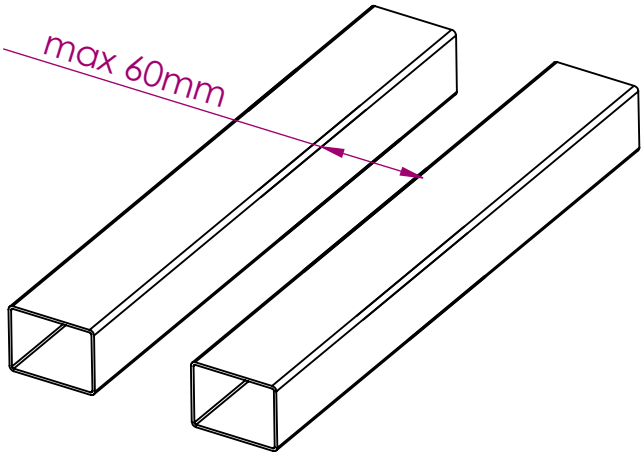
max 60mm

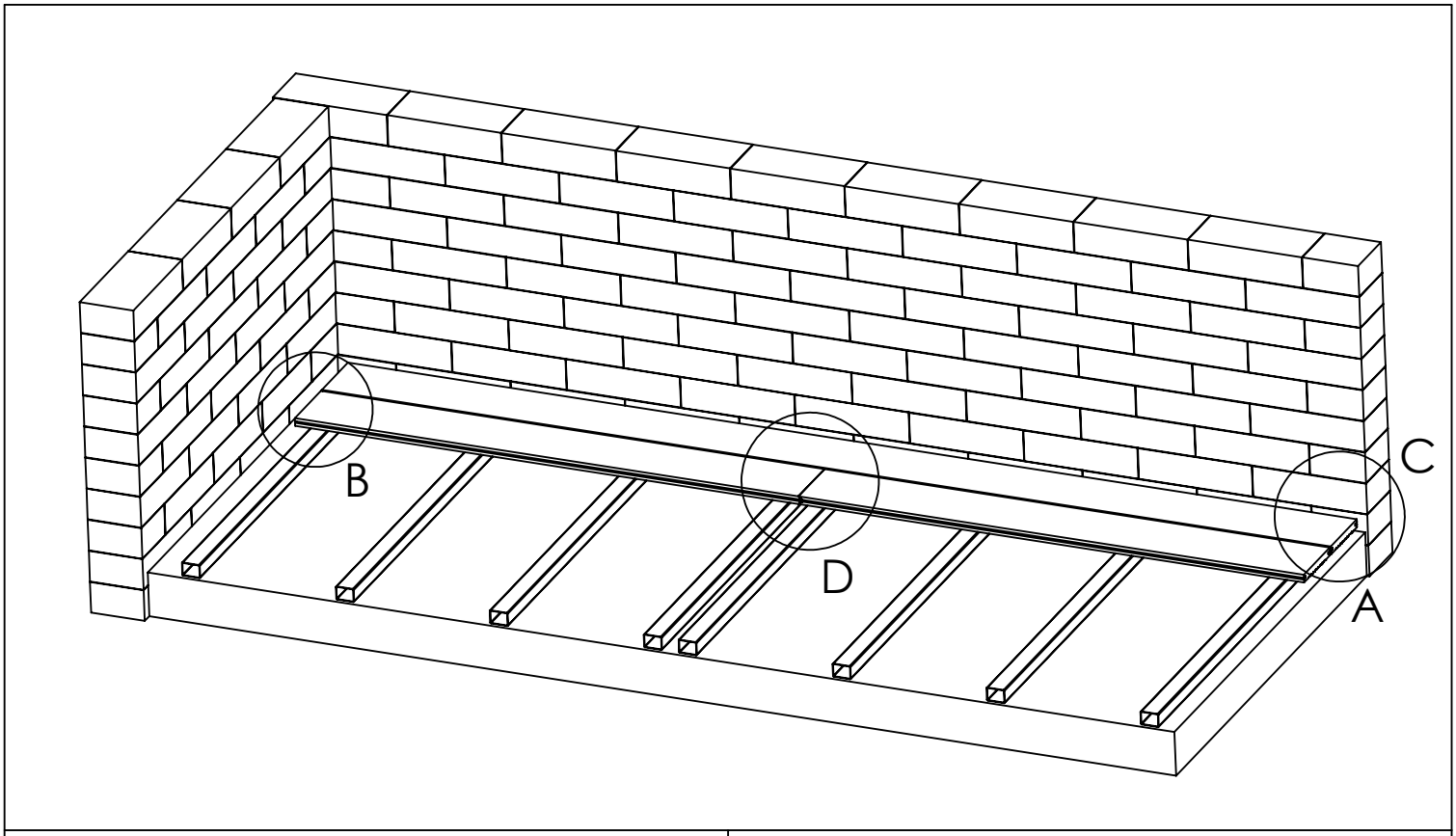
B
D
C
A

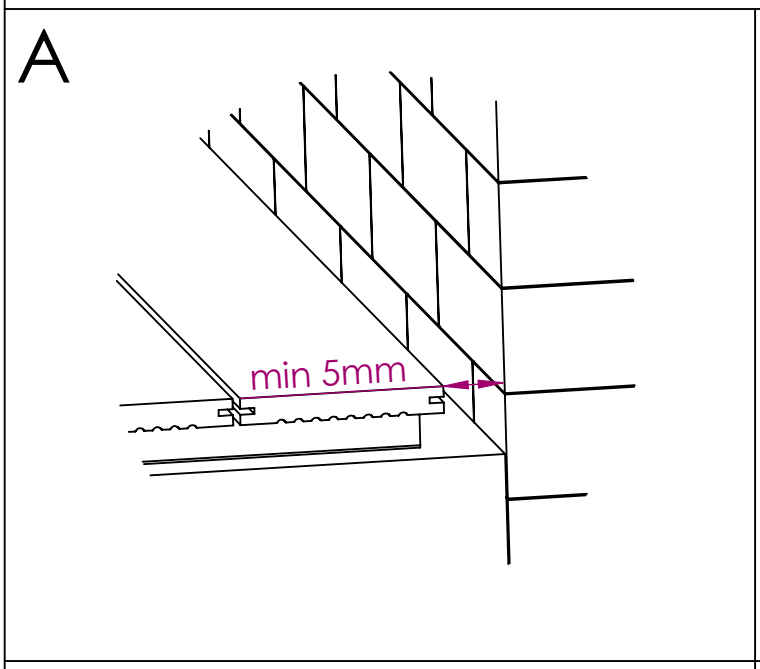
A
min 5mm

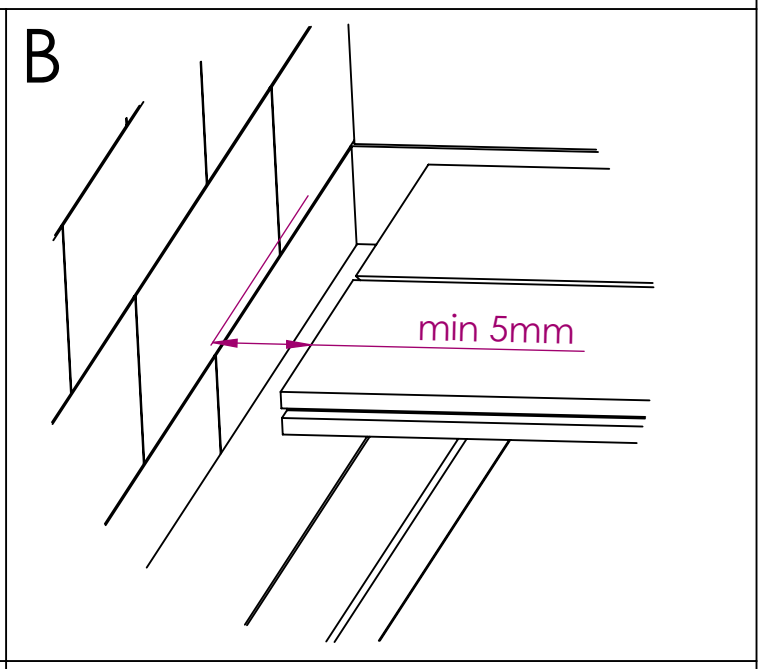
B
min 5mm

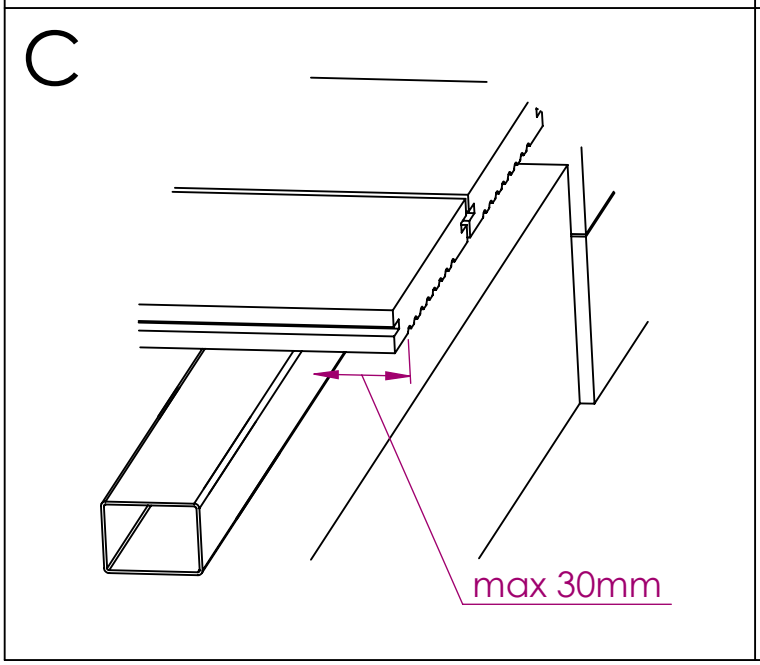
C
max 30mm

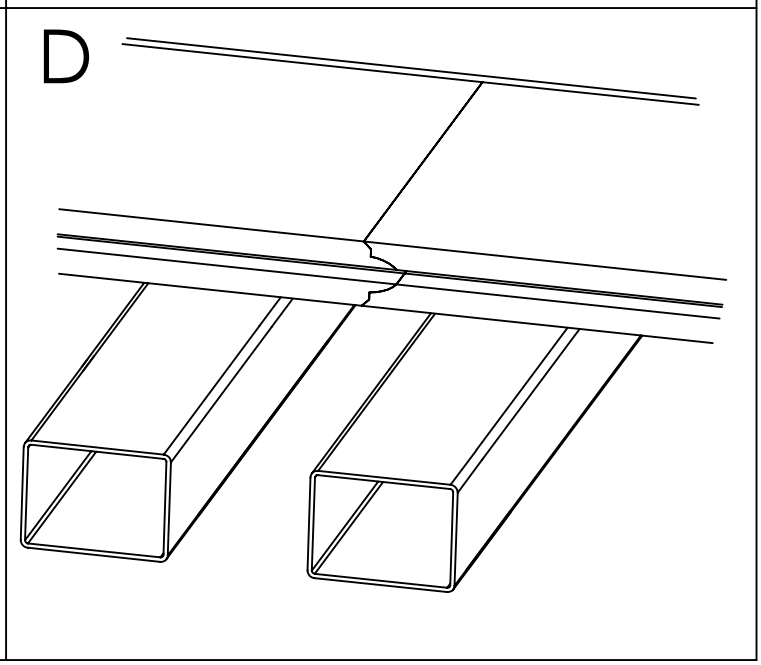
D

1.

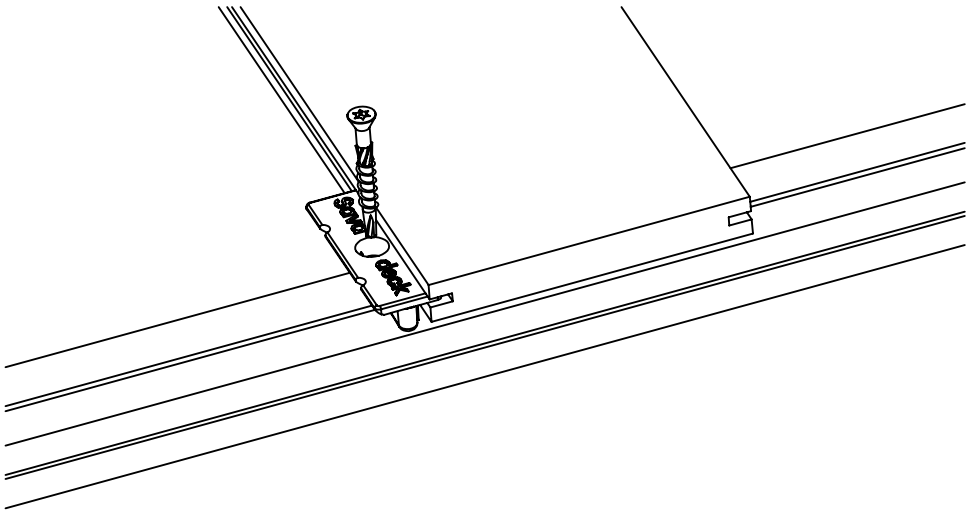

2.

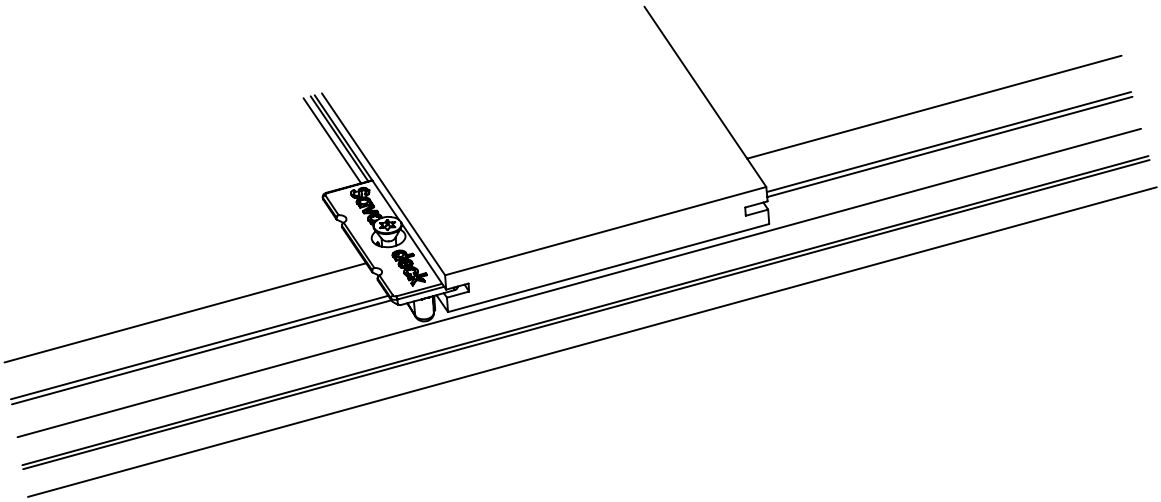

3.

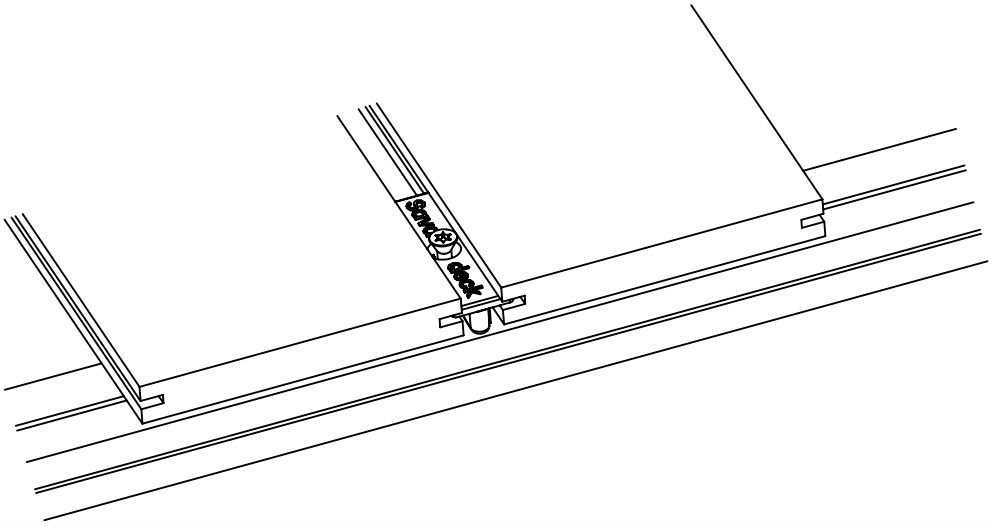

4.

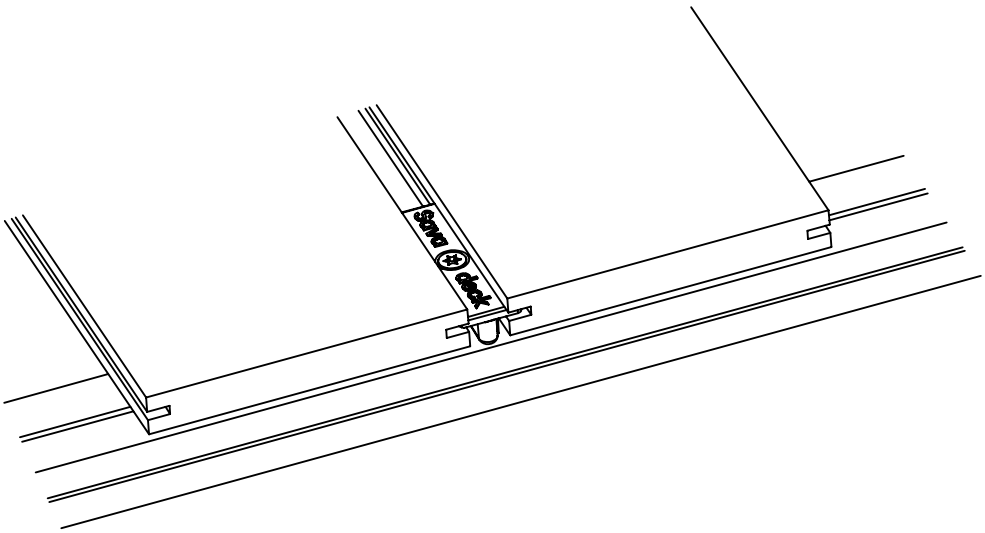

1.

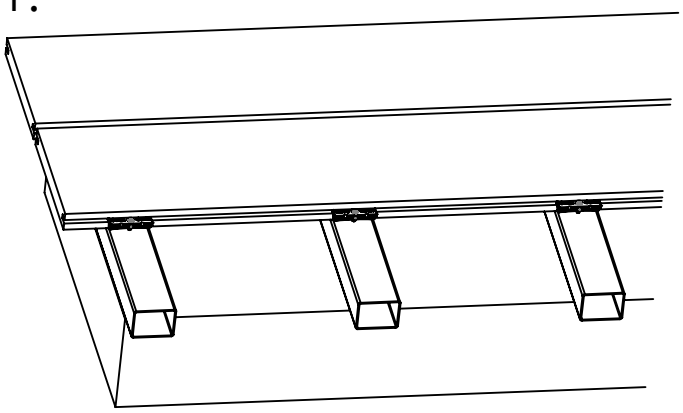

2.

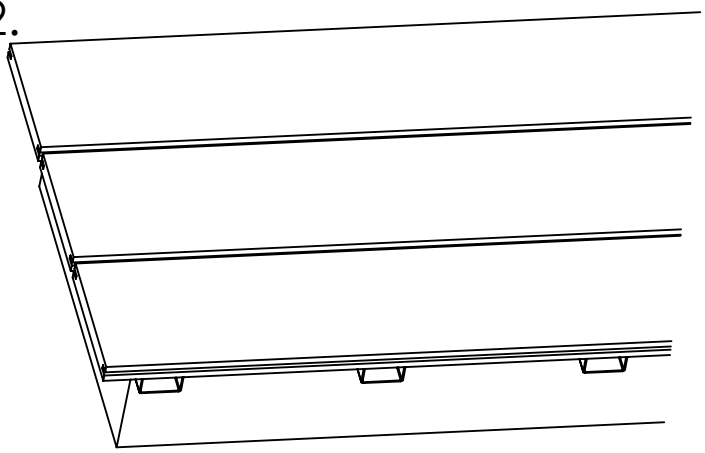

3.

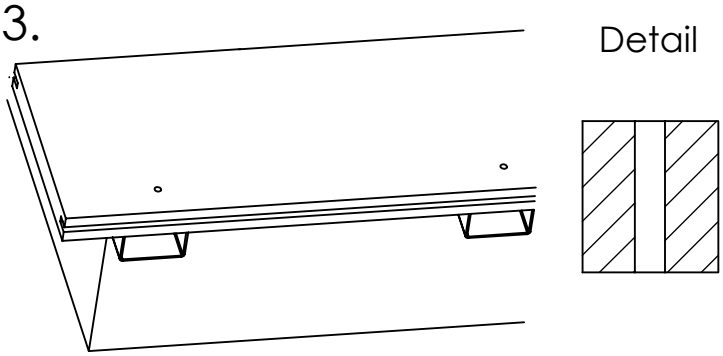

4.

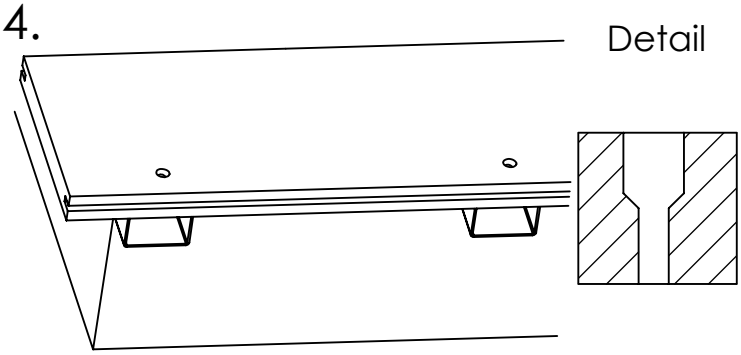

5.

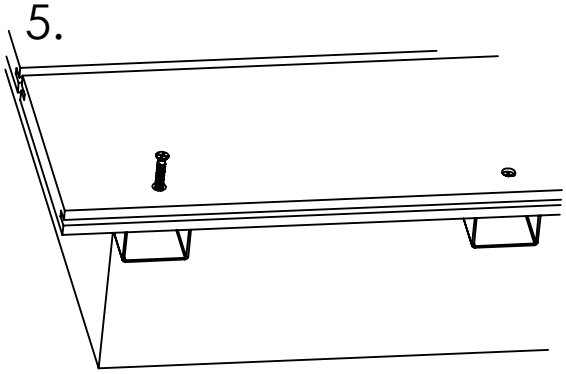

6.

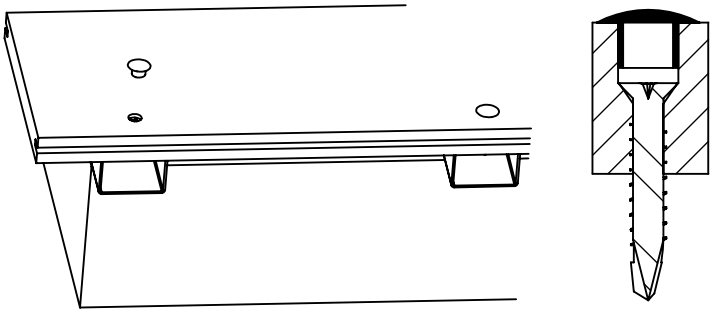

Detail

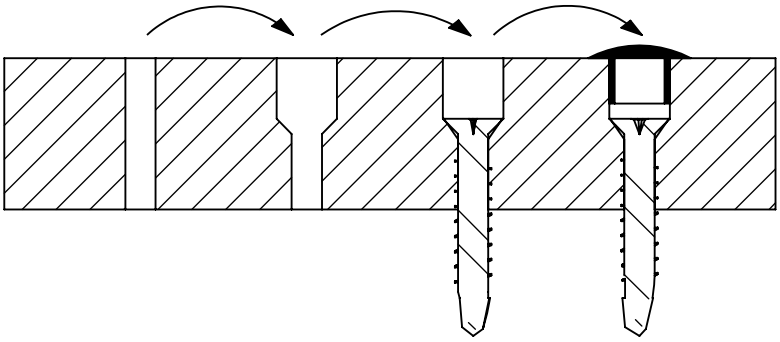

7.

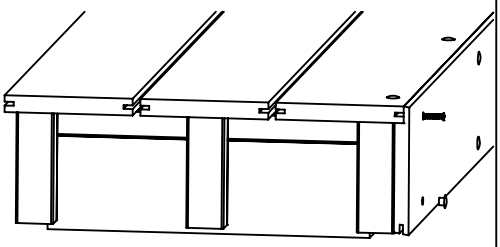

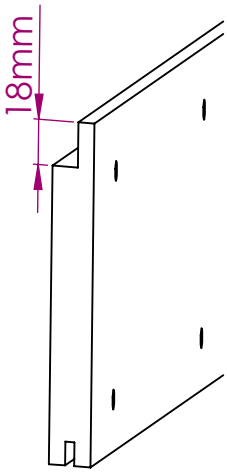
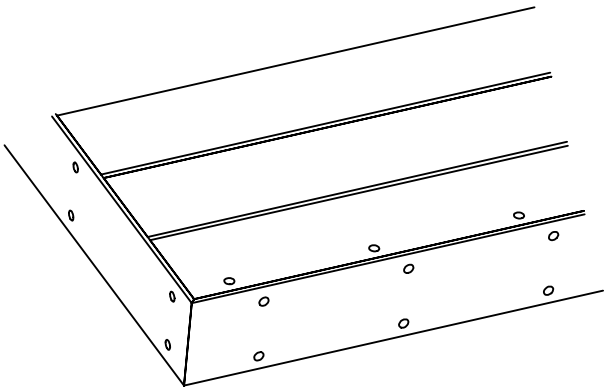
8.